Opel Blitz
(German 3ton 4x2) cargo truck

ITEM NO. 600
MICRODETAILS SET
1/35 Scale

The parts included in this kit are to be assembled in conjunction with the Tamiya kit 35291. For best results in the assembling of photo-etched and resin parts use cyanoacrylate glue. Always remember to use cyanoacrylate glue in a well ventilated area. Before assembling be sure to remove all the parts to be substituted with photo-etched parts. It is advisable before assembling to study well the instructions which accompany this kit plus any other sufficient documentation.It is advise to heat the metal parts before glueing, once the metal is hot it will be easier to bend.

- REPEAT SAME OPERATION FOR THE OTHER SIDE
- THIS PART SUBSTITUTE THE PLASTIC PART N...
- ADD NUT
- X2 MAKE 2 PIECES
- REMOVE OR SUBSTITUTE THE PLASTIC KIT PART WITH ROYAL MODEL PART
- PK PLASTIC KIT PART

If ulterior details are required for your model it is possible to use added set ROYAL MODEL No. 598-599.

1

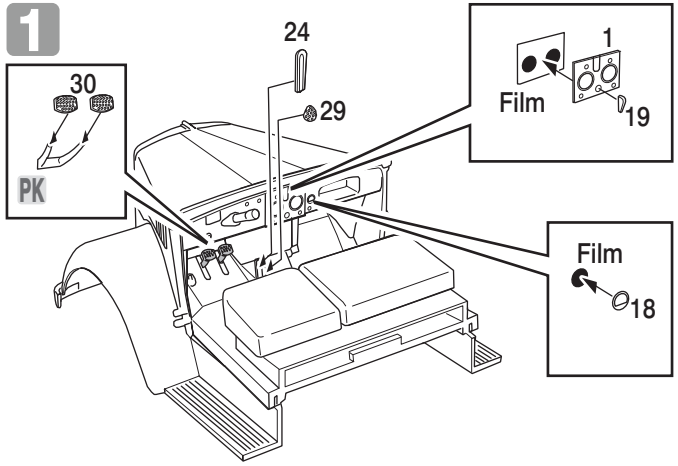

2

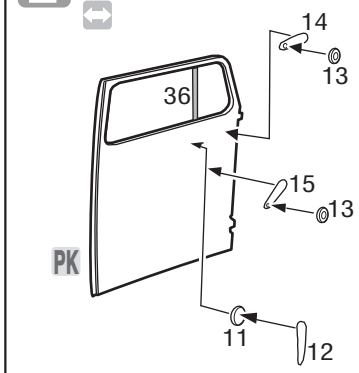

3

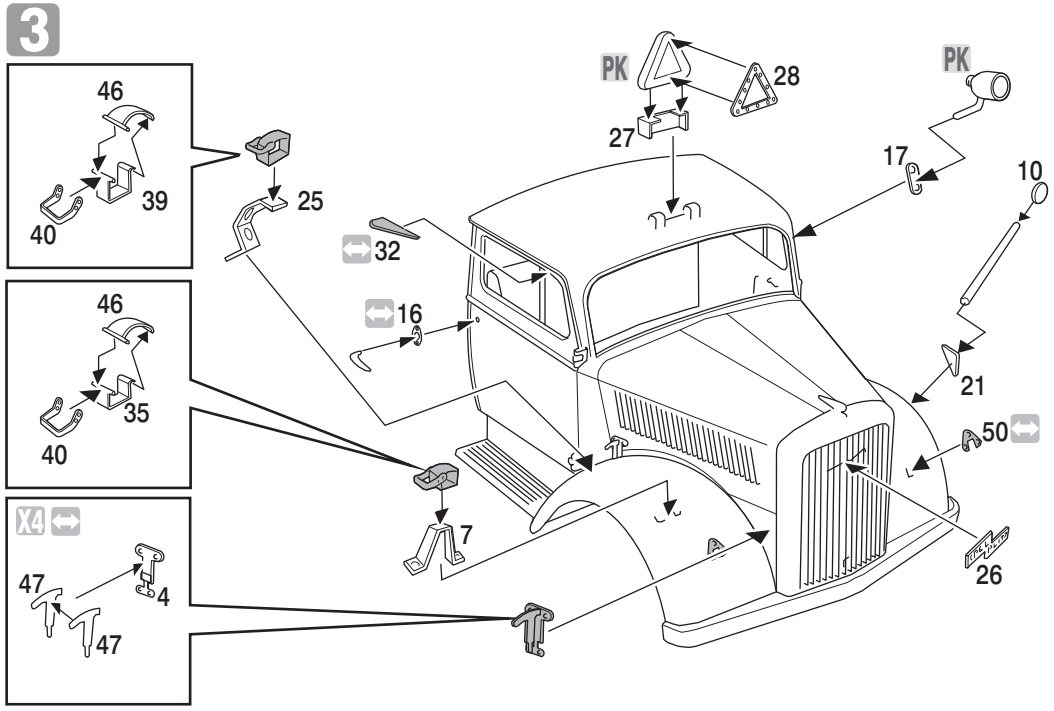

4

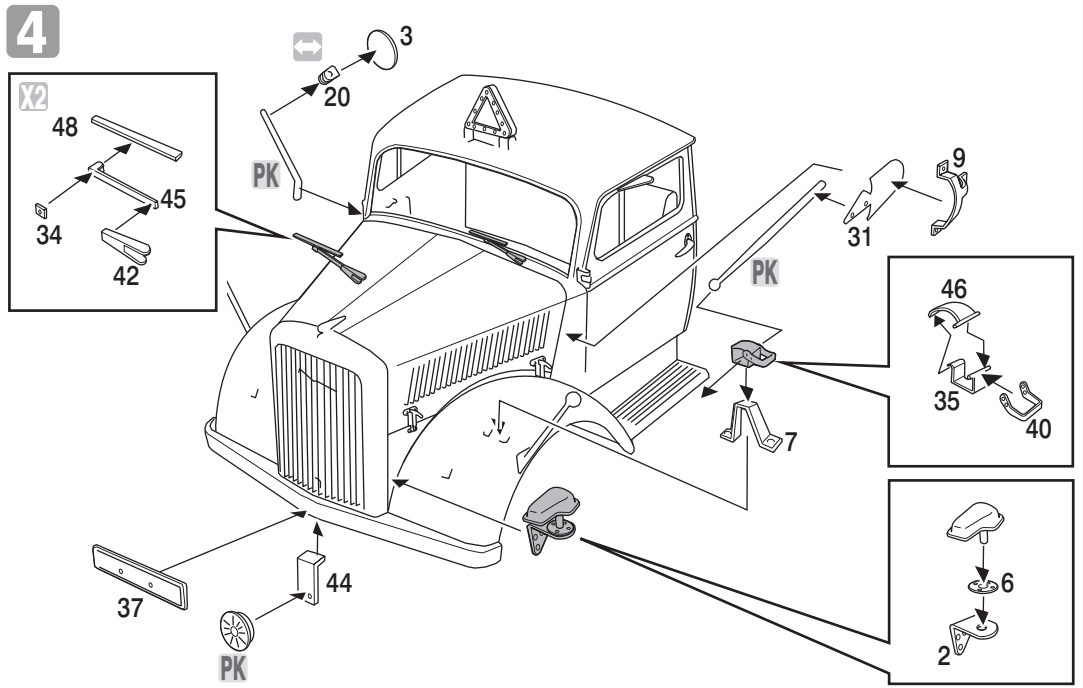

5

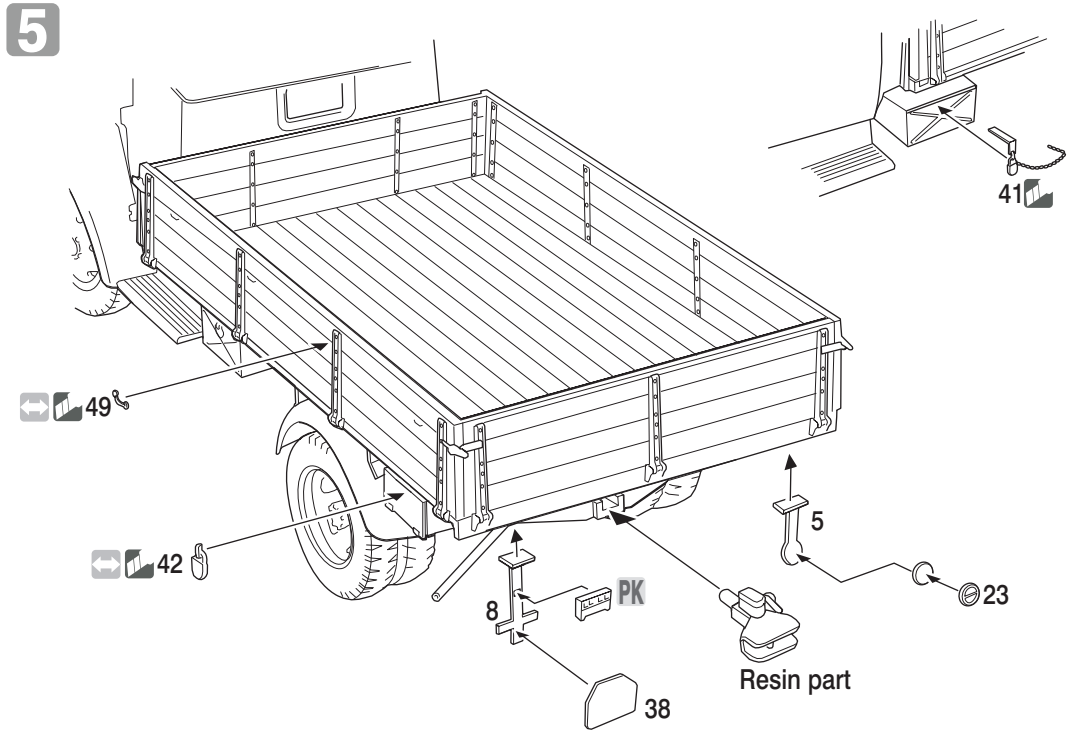

ROYAL MODEL - Via E. Montale, 19- 95030 PEDARA (CT) ITALY
E-mail: info@royalmodel.com - Internet: www.royalmodel.com

ROYAL MODEL ©(2009)