ROYAL MODEL
DIORAMA ACCESSORIES

Semovente M40
Carro armato M13/40

MICRODETAILS SET
1/35 Scale

ITEM NO. 596

The parts included in this kit are to be assembled in conjunction with the Tamiya kit 294-296. For best results in the assembling of photo-etched and resin parts use cyanoacrylate glue. Always remember to use cyanoacrylate glue in a well ventilated area. Before assembling be sure to remove all the parts to be substituted with photo-etched parts. It is advisable before assembling to study well the instructions which accompany this kit plus any other sufficient documentation.It is advise to heat the metal parts before glueing, once the metal is hot it will be easier to bend.

REPEAT SAME OPERATION FOR THE OTHER SIDE
REMOVE OR SUBSTITUTE THE PLASTIC KIT PART WITH ROYAL MODEL PART
X2 MAKE 2 PIECES
PK PLASTIC KIT PART

If ulterior accessories are required for this model it is possible to use the ROYAL MODEL items:602- Stowage M13/40

1
Use the parts no. 71 and 73 just for "1°/2° serie" version

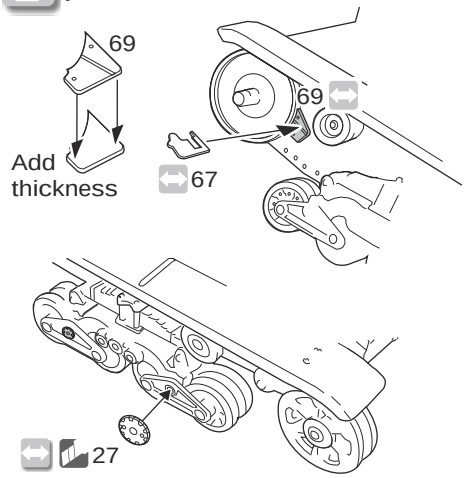

2
Semovente M40

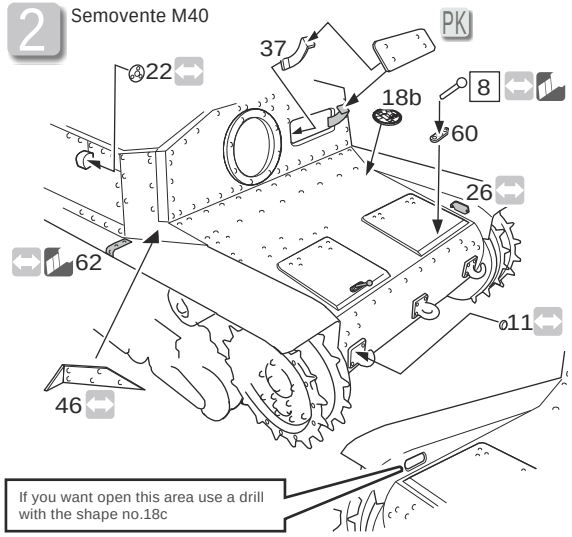

If you want open this area use a drill with the shape no.18c

3
Semovente M40

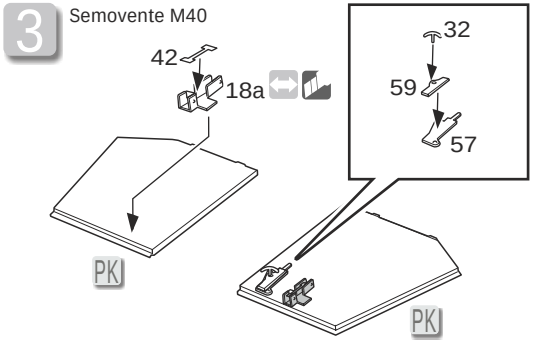

4
Carro armato M13/40

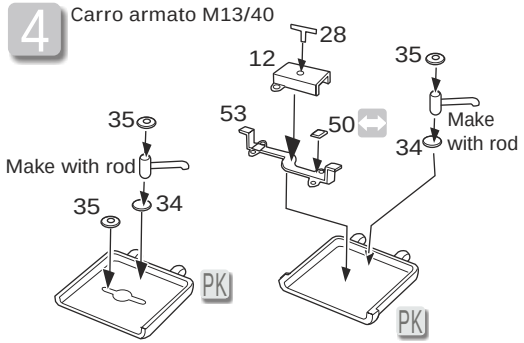

5
Semovente M40

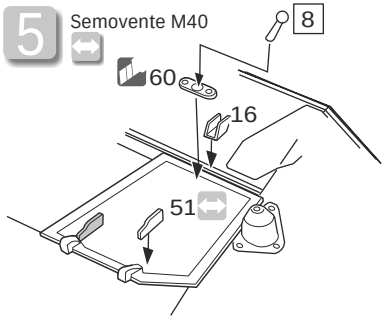

6
Carro armato M13/40

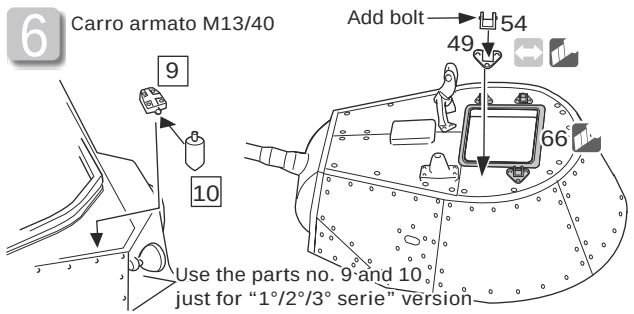

Use the parts no. 9 and 10 just for "1°/2°/3° serie" version

5
Carro armato M13/40

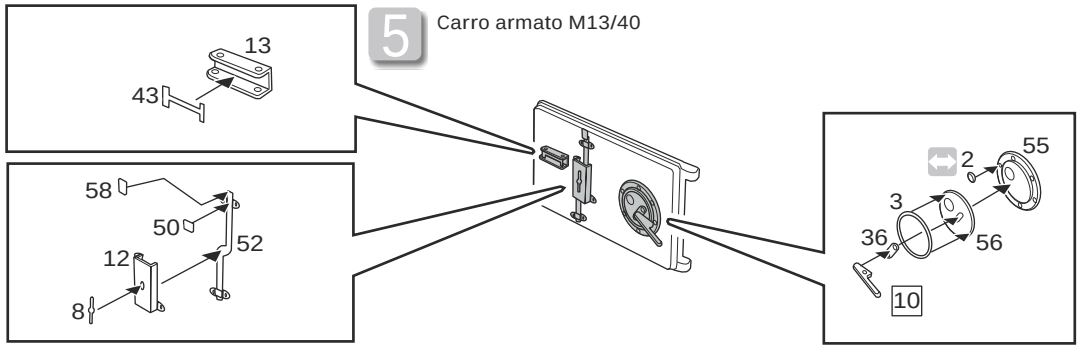

6

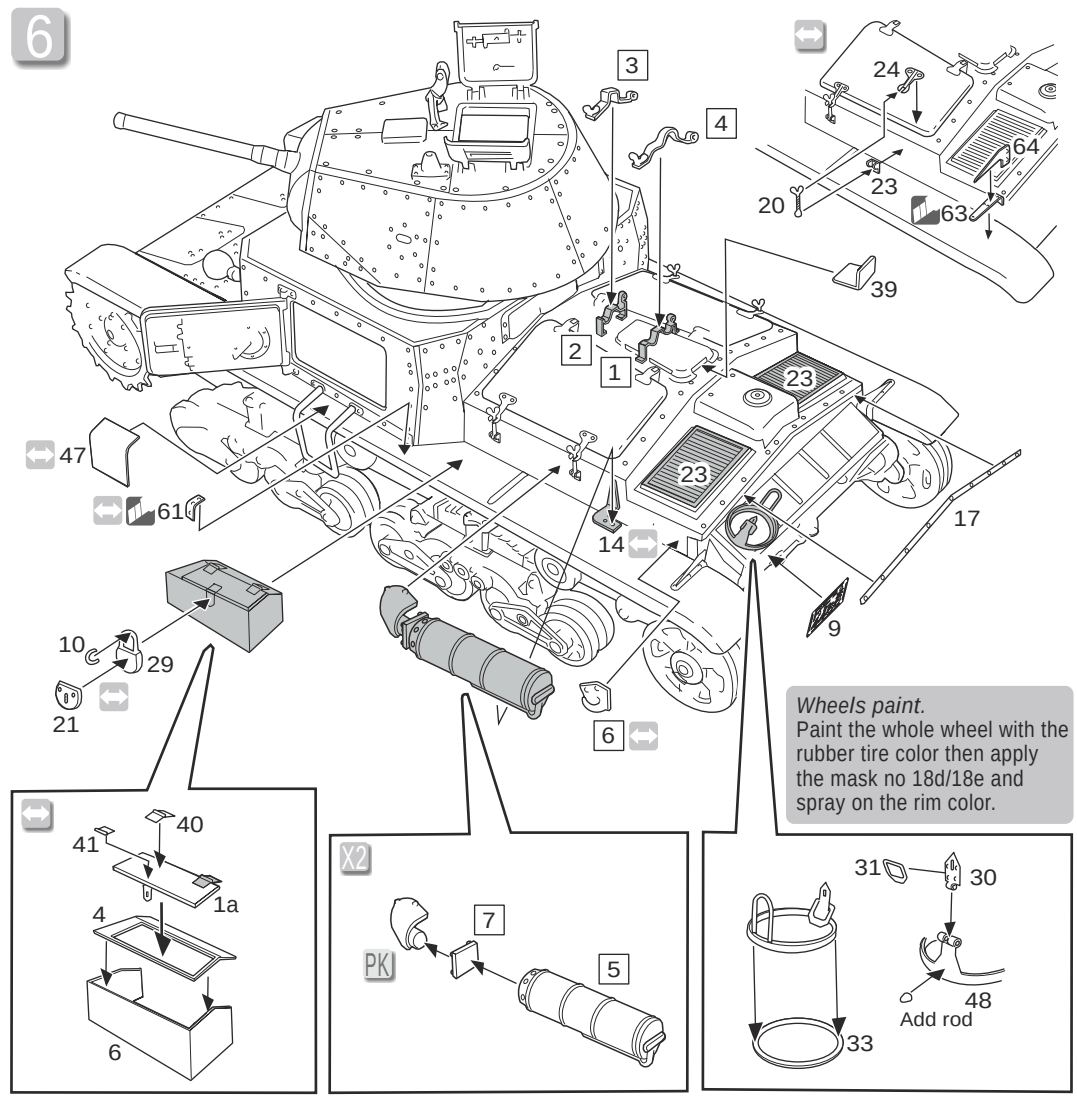

Wheels paint.
Paint the whole wheel with the rubber tire color then apply the mask no 18d/18e and spray on the rim color.

ROYAL MODEL - Via E. Montale, 19-95030 PEDARA (CT) ITALY
E-mail: info@royalmodel.com - Internet: www.royalmodel.com

©(2009) ROYAL MODEL