ROYAL MODEL
DIORAMA ACCESSORIES

Item no. 561
1/35 scale

Elco 80'Torpedo Boat PT-596

The parts included in this kit are to be assembled in conjunction with the Italeri kit. For best results in the assembling of photo-etched and resin parts use cyanoacrylate glue. Always remember to use cyanoacrylate glue in a well ventilated area. Before assembling be sure to remove all the parts to be substituted with photo-etched parts. It is advisable before assembling to study well the instructions which accompany this kit plus any other sufficient documentation.It is advise to heat the metal parts before glueing, once the metal is hot it will be easier to bend.

BE CAREFUL
REPEAT SAME OPERATION FOR THE OTHER SIDE
THIS PART SUBSTITUTE THE PLASTIC PART N...
ADD PLASTICARD STRUCTURE
X2 MAKE 2 PIECES
ADD ROD
REMOVE OR SUBSTITUTE THE PLASTIC KIT PART WITH ROYAL MODEL PART
TO BE HEATED
TO BEND
R RESIN PART
PK PLASTIC KIT PART
TO FOLD

1

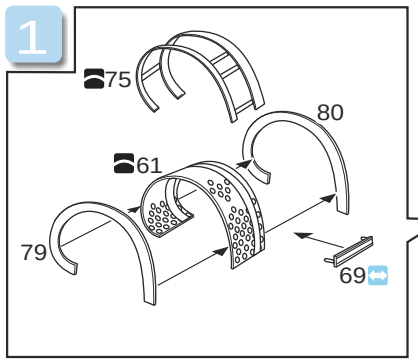



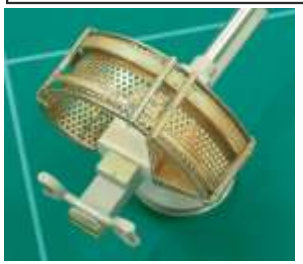

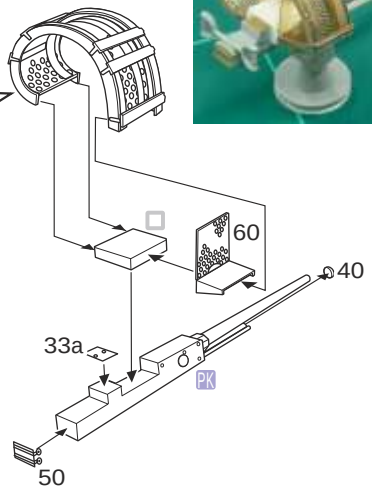

2



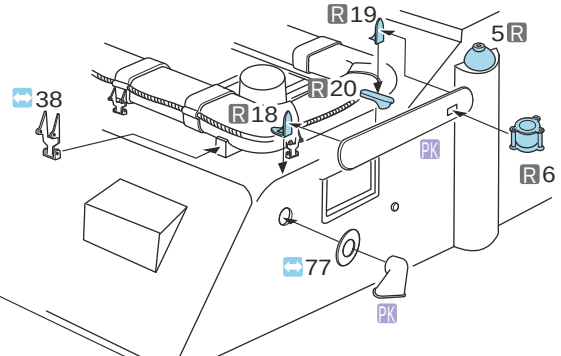

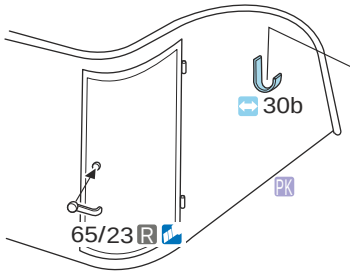



3

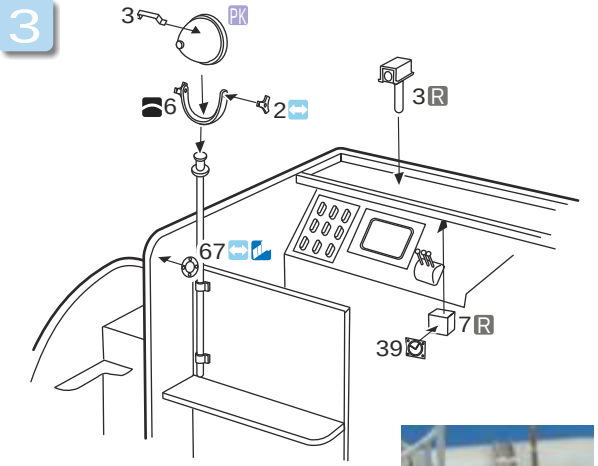

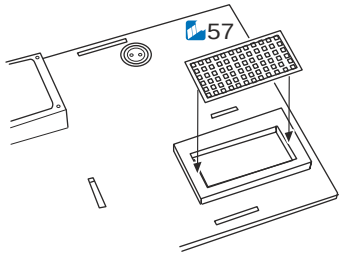



4

Holes on plastic part 30D are not correct, reshape these as shown.

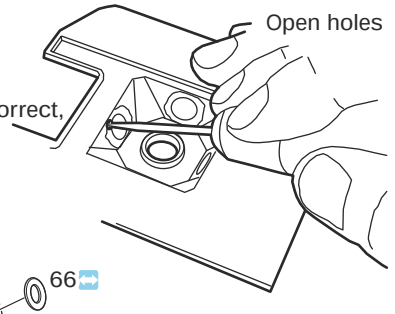

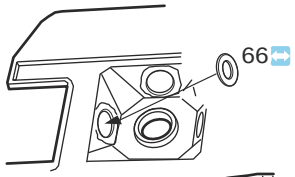

Fill with putty the open areas

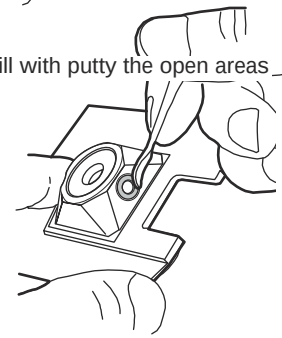

Right hole

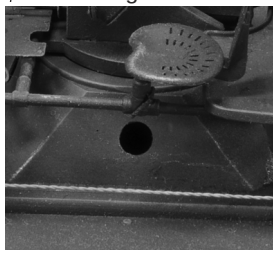

5

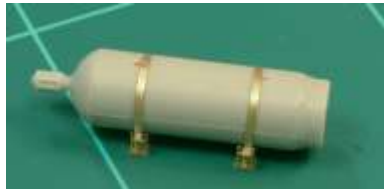

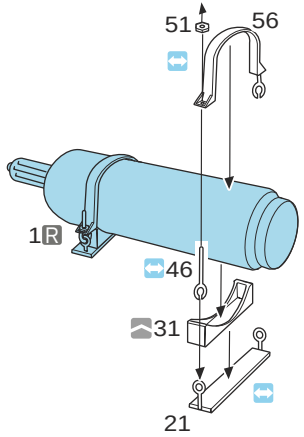

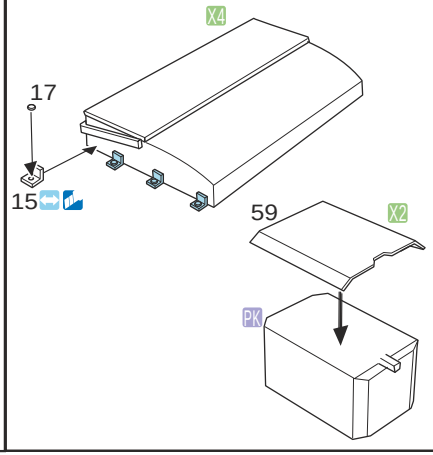



6

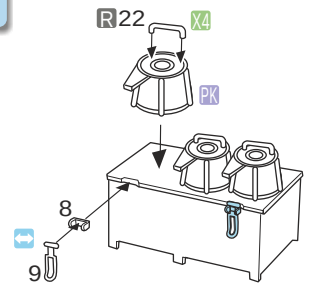

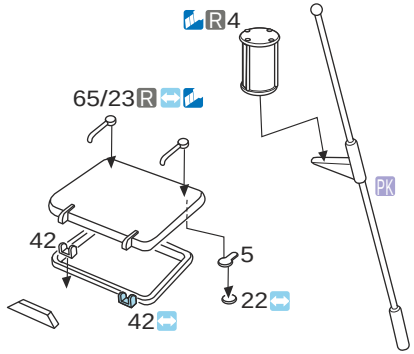

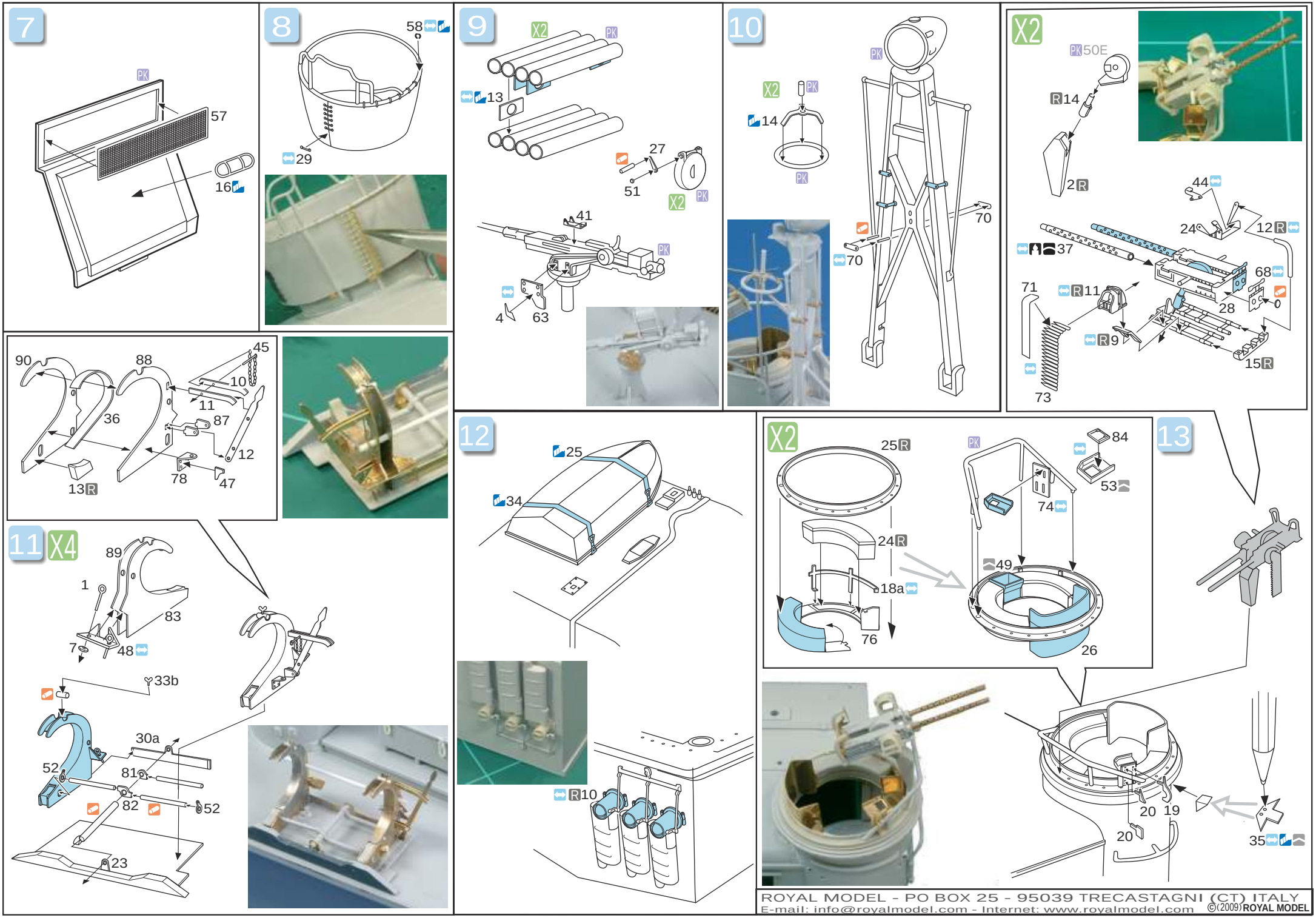
7
PK
57
16
8
58
29
9
X2
PK
13
27
51
X2
PK
41
PK
4
63
10
X2
PK
14
PK
PK
70
70
X2
PK 50E
R14
2R
44
24
12R
37
68
71
R11
28
0
R9
15R
73
90
88
45
10
11
36
87
12
13R
78
47
11 X4
89
1
83
7
48
33b
30a
52
81
82
52
23
12
25
34
R10
X2
25R
24R
18a
76
PK
84
53
74
49
26
13
20
19
20
35
ROYAL MODEL - PO BOX 25 - 95039 TRECASTAGNI (CT) ITALY
E-mail: info@royalmodel.com - Internet: www.royalmodel.com
©(2009) ROYAL MODEL

ROYAL MODEL®
DIORAMA ACCESSORIES

Bofors

Item no. 560
1/35 scale

THIS PART SUBSTITUTE THE PLASTIC PART N...
MAKE 2 PIECES
ADD ROD
TO BEND
PLASTIC KIT PART
ADD NUT
BE CAREFUL
REPEAT SAME OPERATION FOR THE OTHER SIDE
RESIN PART
REMOVE OR SUBSTITUTE THE PLASTIC KIT PART WITH ROYAL MODEL PART
TO BE HEATED
TO FOLD

The parts included in this kit are to be assembled in conjunction with the Italeri or AFV kit. For best results in the assembling of photo-etched and resin parts use cyanoacrylate glue. Always remember to use cyanoacrylate glue in a well ventilated area. Before assembling be sure to remove all the parts to be substituted with photo-etched parts. It is advisable before assembling to study well the instructions which accompany this kit plus any other sufficient documentation.It is advise to heat the metal parts before glueing, once the metal is hot it will be easier to bend.

1

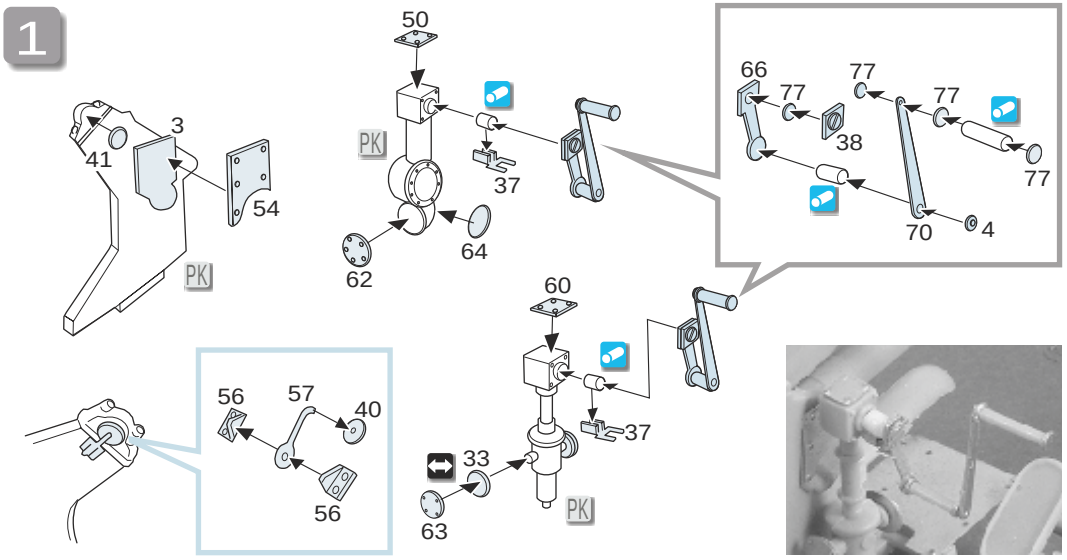

2

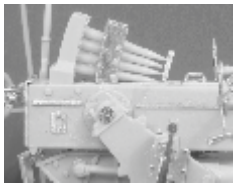

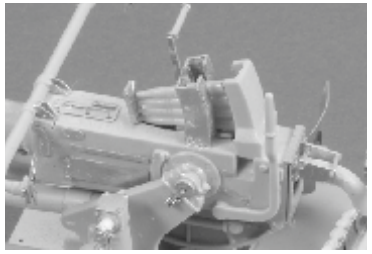

3

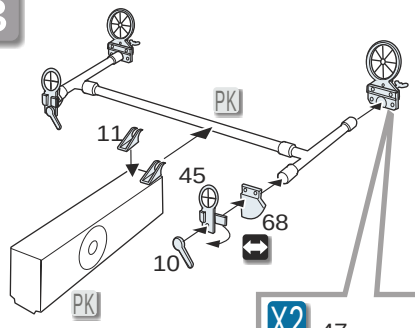

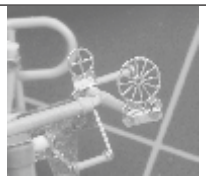

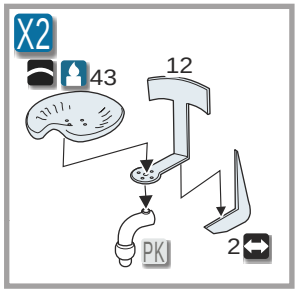

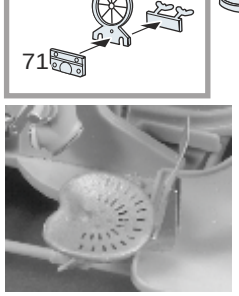



4



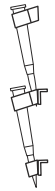

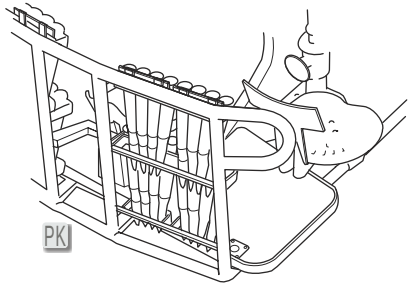

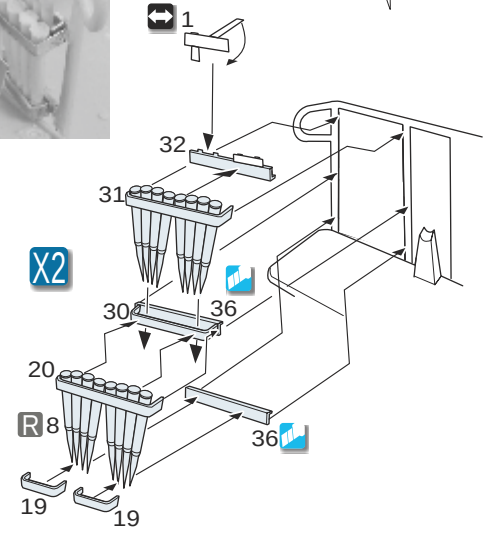

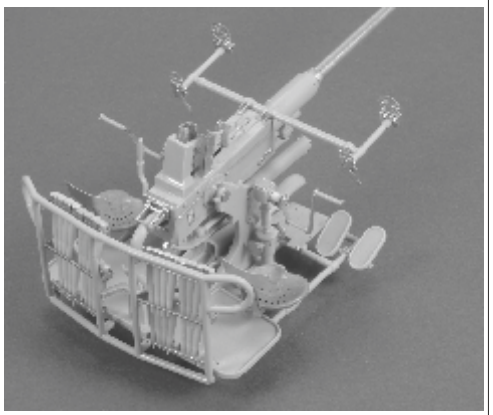

ROYAL MODEL - PO BOX 25 - 95039 TRECASTAGNI (CT) ITALY
E-mail: info@royalmodel.com - Internet: www.royalmodel.com ©(2009)ROYAL MODEL