ROYAL MODEL
DIORAMA ACCESSORIES

ITEM NO. 523

MICRODETAILS SET
1/35 Scale

Sd. Kfz. 131 "MARDER II" (part 1°)

The parts included in this kit are to be assembled in conjunction with the Dragon kit No.6262. For best results in the assembling of photo-etched and resin parts use cyanoacrylate glue. Always remember to use cyanoacrylate glue in a well ventilated area. Before assembling be sure to remove all the parts to be substituted with photo-etched parts. It is advisable before assembling to study well the instructions which accompany this kit plus any other sufficient documentation. It is advise to heat the metal parts before glueing, once the metal is hot it will be easier to bend.

BE CAREFUL · REPEAT SAME OPERATION FOR THE OTHER SIDE · THIS PART SUBSTITUTE THE PLASTIC PART N.. · OPEN HOLE · X2 MAKE 2 PIECES · ADD ROD
REMOVE OR SUBSTITUTE THE PLASTIC KIT PART WITH ROYAL MODEL PART · TO BE HEATED · FACULTATIVE · FILL HOLE · PK PLASTIC KIT PART · ADD NUT

1

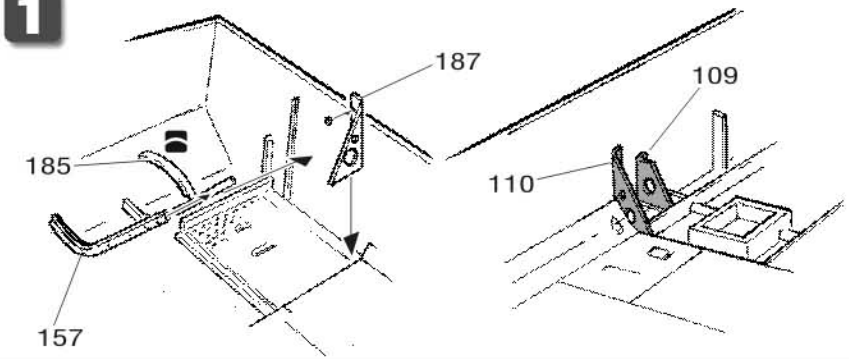

2

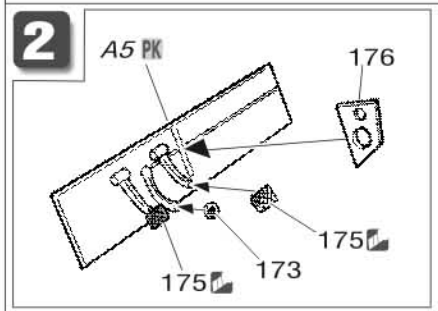

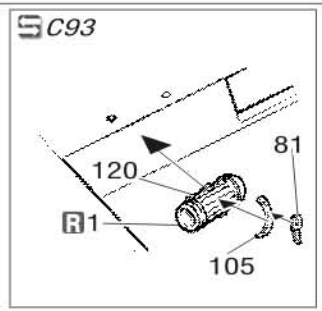

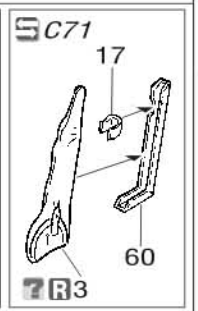

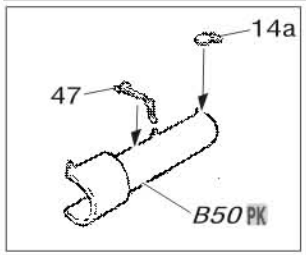

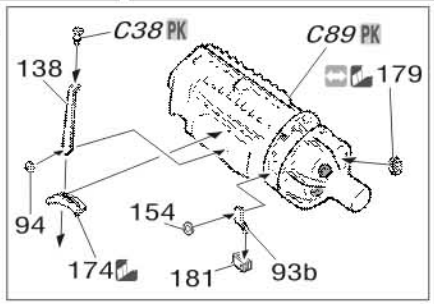

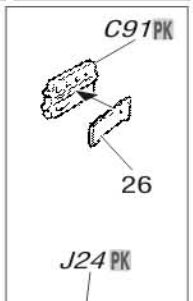

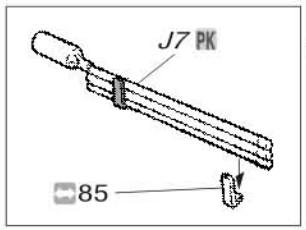

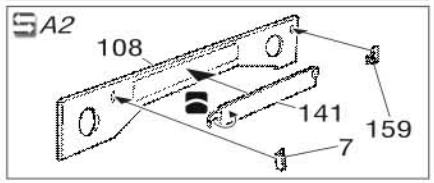

3

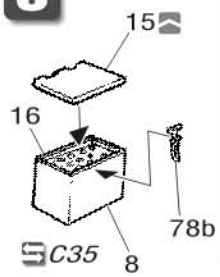

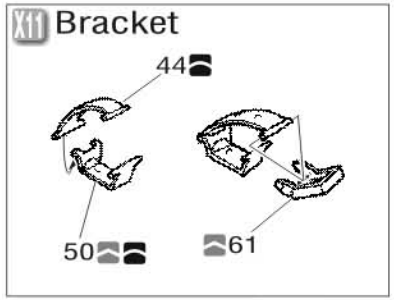

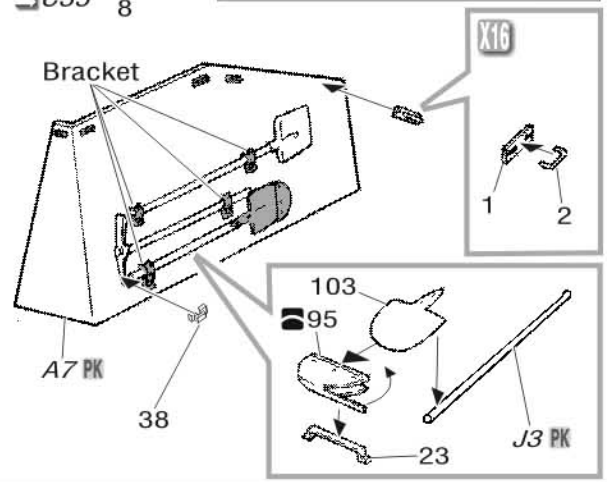

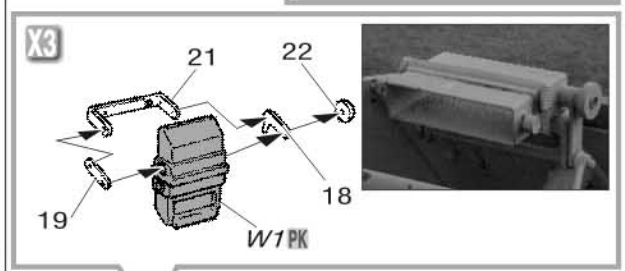

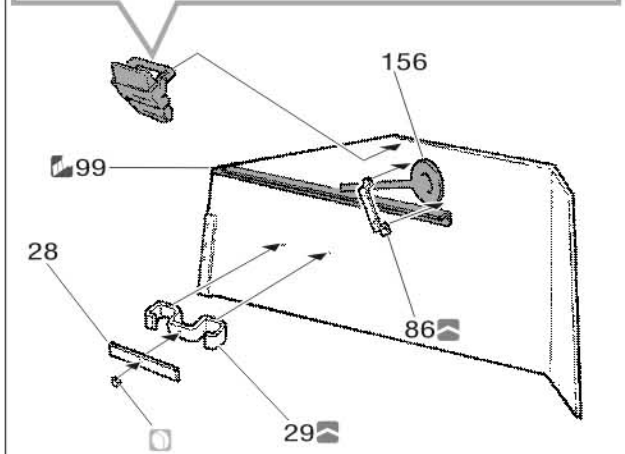

4

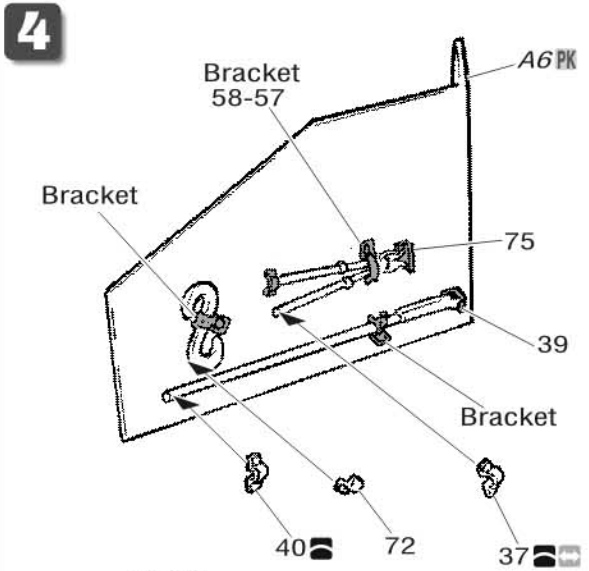

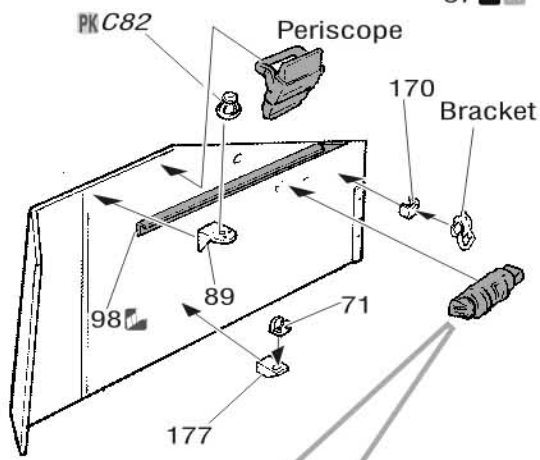

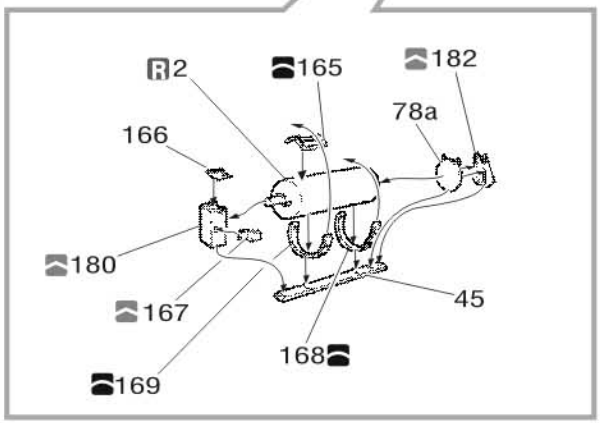

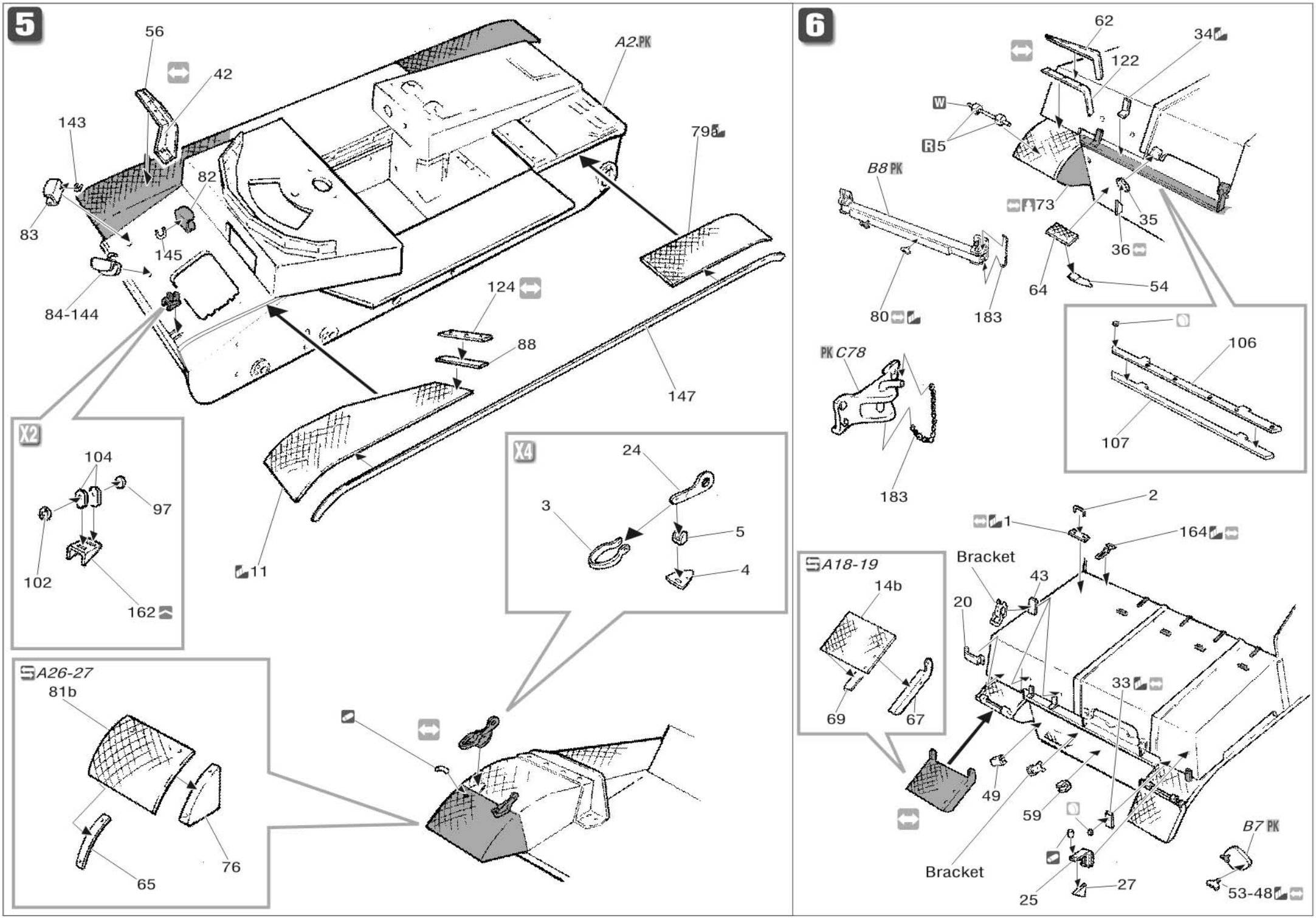
5
56
42
A2 PK
143
79
82
83
145
84-144
124
88
147
11
X2
104
97
102
162
X4
24
3
5
4
A26-27
81b
65
76
6
62
34
122
W
R5
B8 PK
73
35
36
64
54
80
183
PK C78
183
106
107
2
1
164
Bracket
43
20
A18-19
14b
69
67
33
49
59
B7 PK
Bracket
25
27
53-48

7

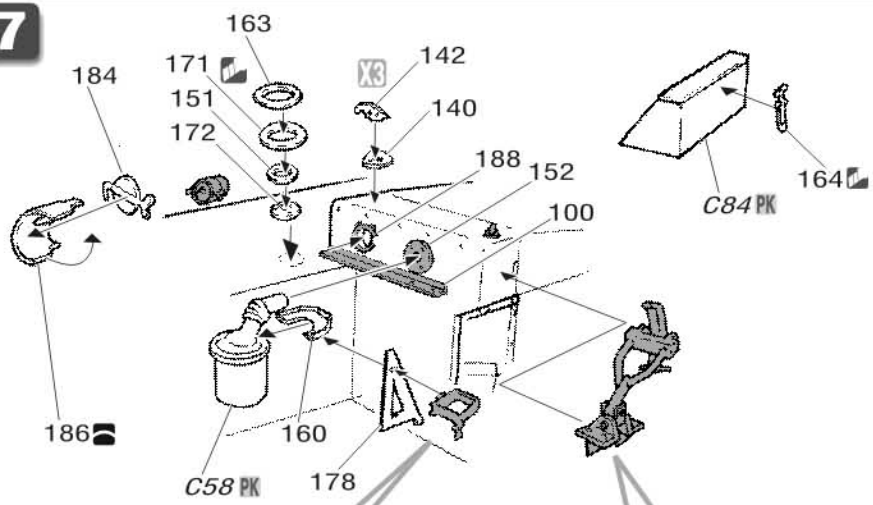

8

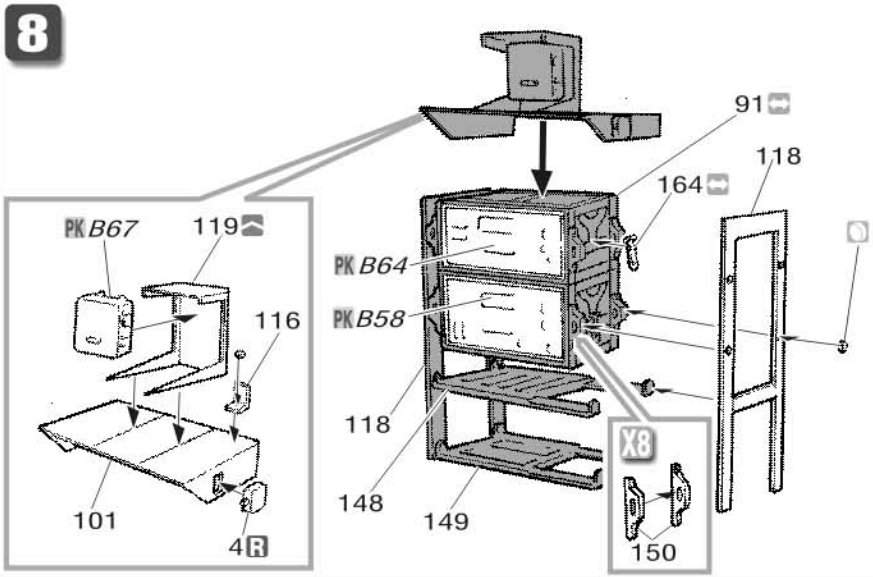

9

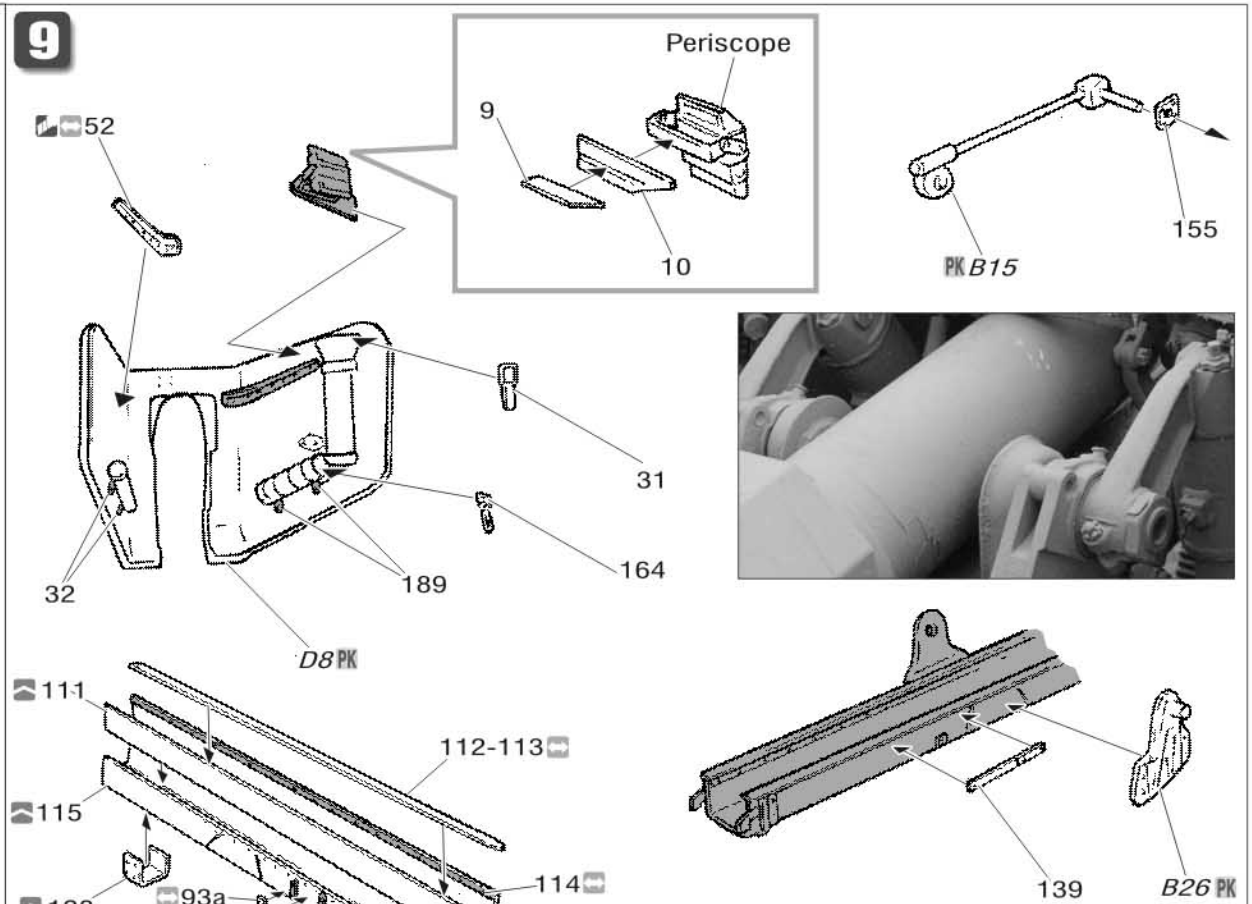

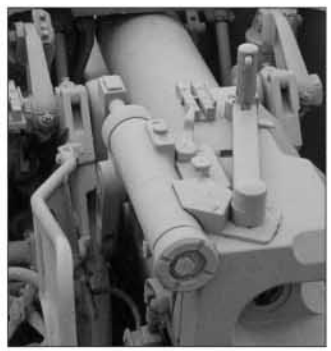

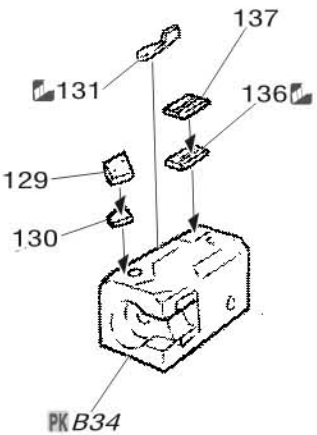

10 Wheels painting.

Use this mask for painting the plastic kit parts D2 and E1.

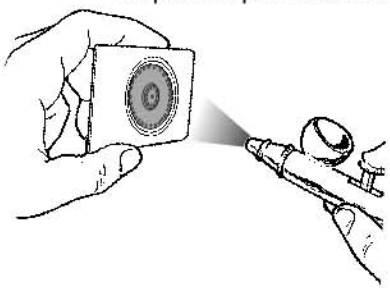

*Before painting the wheel frame colour the whole wheel black.
Hold template no. 90-96 still in position with finger tips and spray whell frame with paint of desidered colour as shown above.

ROYAL MODEL - PO BOX 25 - 95039 TRECASTAGNI (CT) ITALY Tel. +39 95 780 0707-Fax +39 95 780 99 11
E-mail: info@royalmodel.com - Internet: www.royalmodel.com
©(2007) ROYAL MODEL