ROYAL MODEL
DIORAMA ACCESSORIES
ITEM NO. 515

MICRODETAILS SET
1/35 Scale

Sd.Kfz. 234/4

The parts included in this kit are to be assembled in conjunction with the Dragon kit No.6221. For best results in the assembling of photo-etched and resin parts use cyanoacrylate glue. Always remember to use cyanoacrylate glue in a well ventilated area. Before assembling be sure to remove all the parts to be substituted with photo-etched parts. It is advisable before assembling to study well the instructions which accompany this kit plus any other sufficient documentation. It is advise to heat the metal parts before glueing, once the metal is hot it will be easier to bend.

REMOVE OR SUBSTITUTE THE PLASTIC KIT PART WITH ROYAL MODEL PART
REPEAT SAME OPERATION FOR THE OTHER SIDE
THIS PART SUBSTITUTE THE PLASTIC PART N...
X2 MAKE 2 PIECES
ADD ROD
TO BE HEATED
FACULTATIVE
PK PLASTIC KIT PART
ADD NUT

1

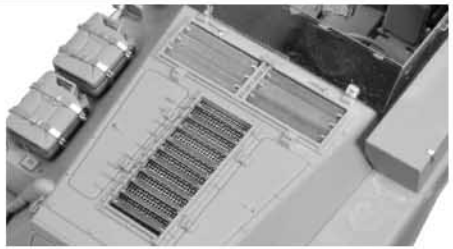

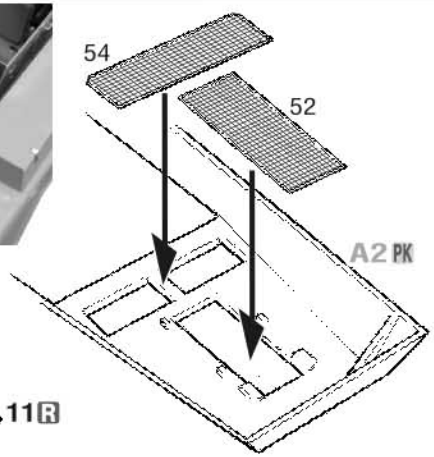

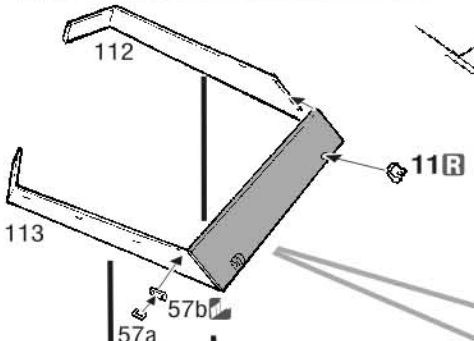

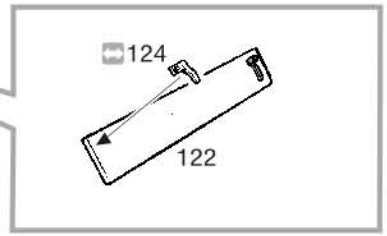

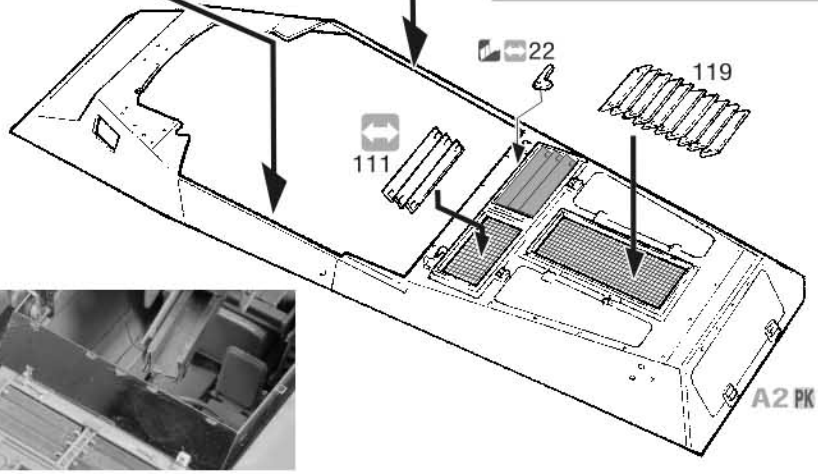

2

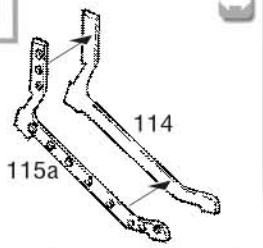

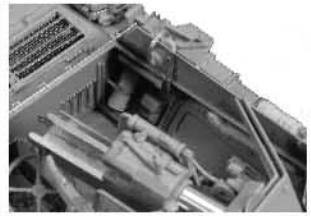

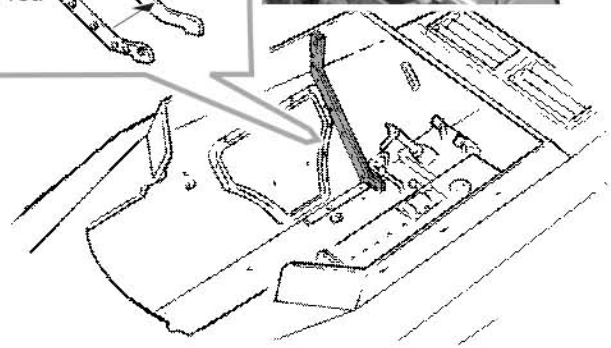

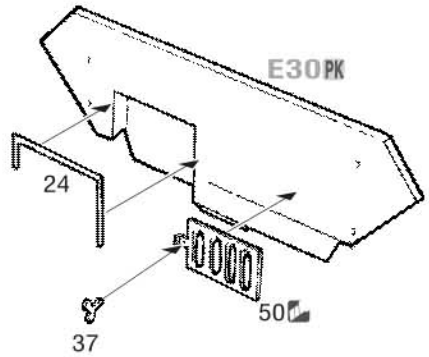

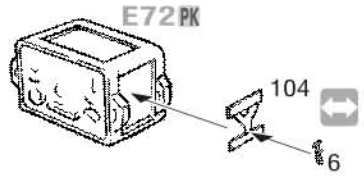

X2 D11



E70

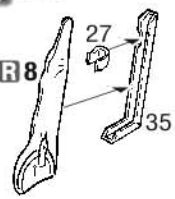

E54
Film sheet

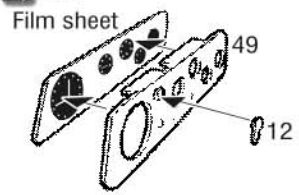

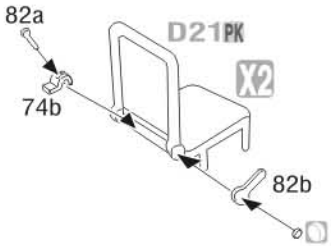

3

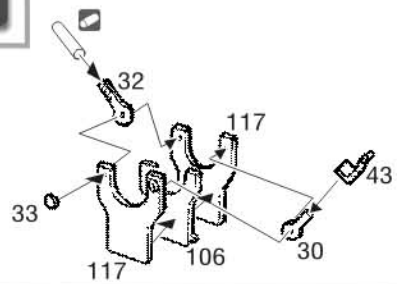



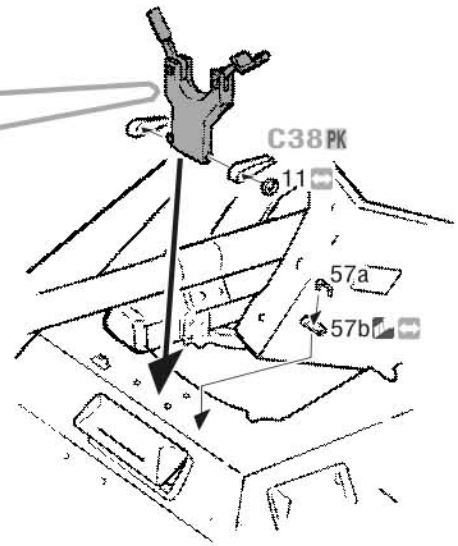

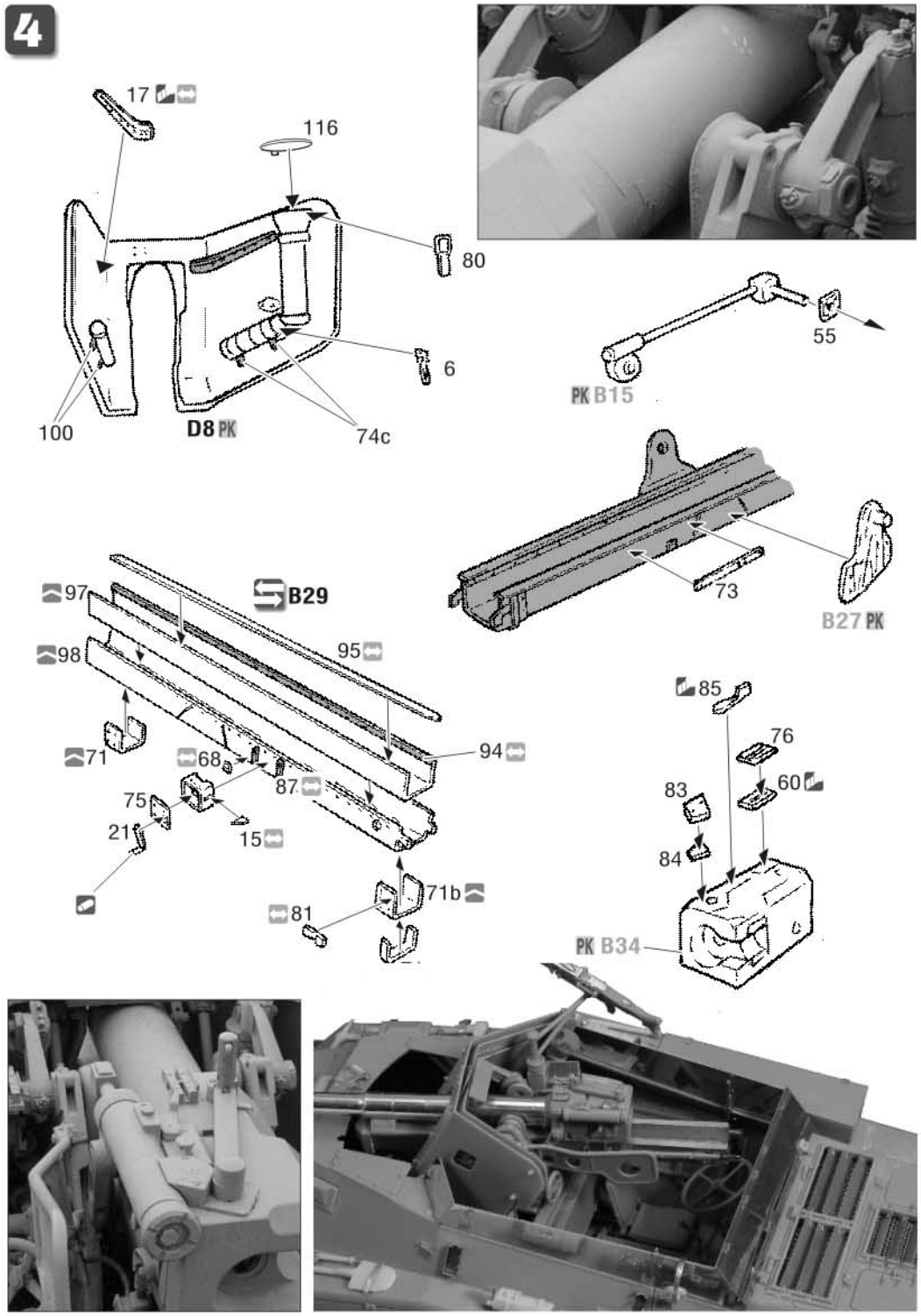
4
17
116
80
6
100
D8 PK
74c
55
PK B15
73
B27 PK
97
B29
98
95
71
68
87
94
75
21
15
71b
81
85
76
83
60
84
PK B34

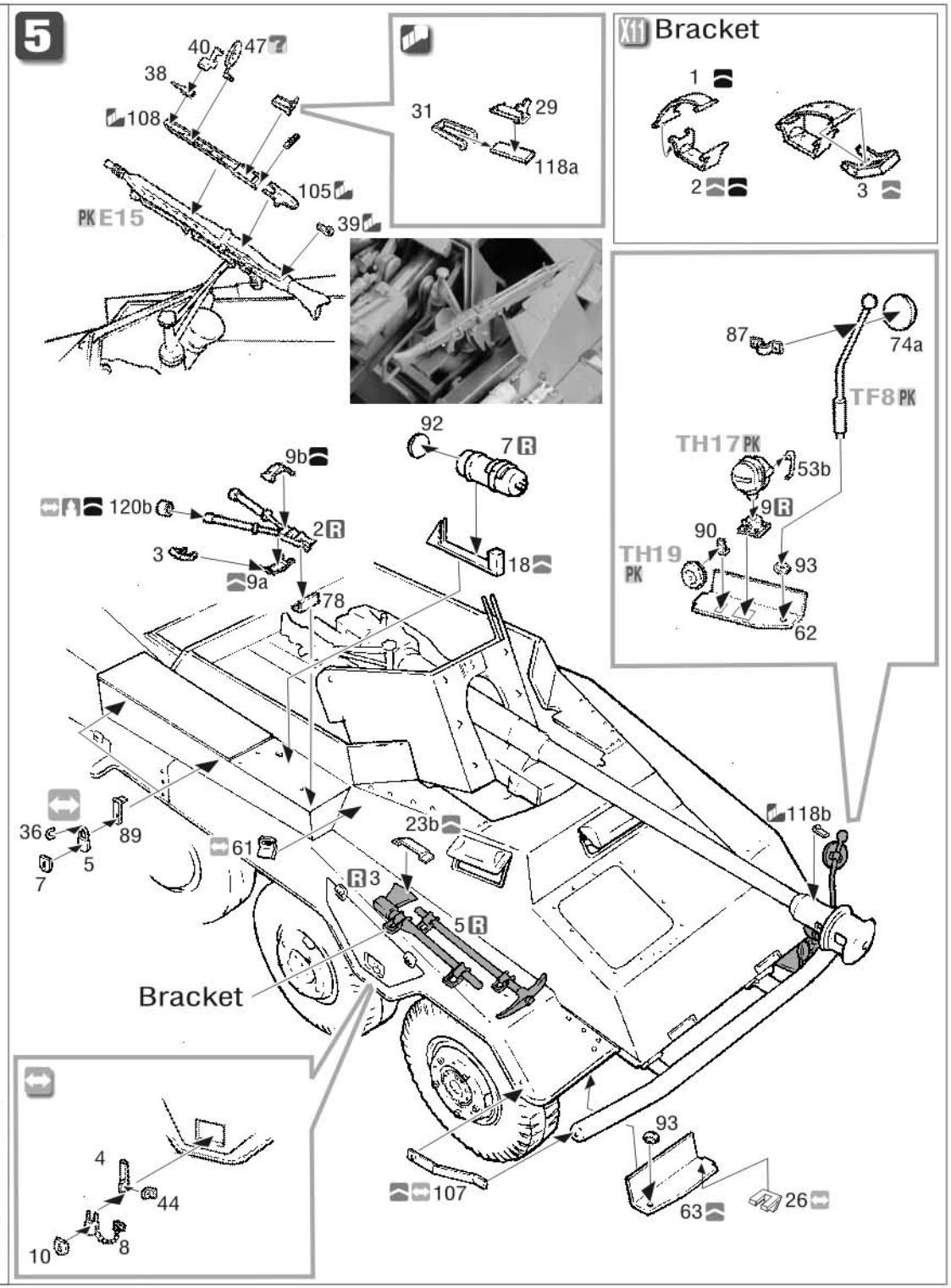
5
40
47
38
108
105
PK E15
39
31
29
118a
X11 Bracket
1
2
3
87
74a
TF8 PK
TH17 PK
53b
9 R
90
TH19 PK
93
62
92
7 R
9b
120b
2 R
3
9a
18
78
36
89
5
7
61
23b
118b
R 3
5 R
Bracket
4
44
10
8
107
93
63
26

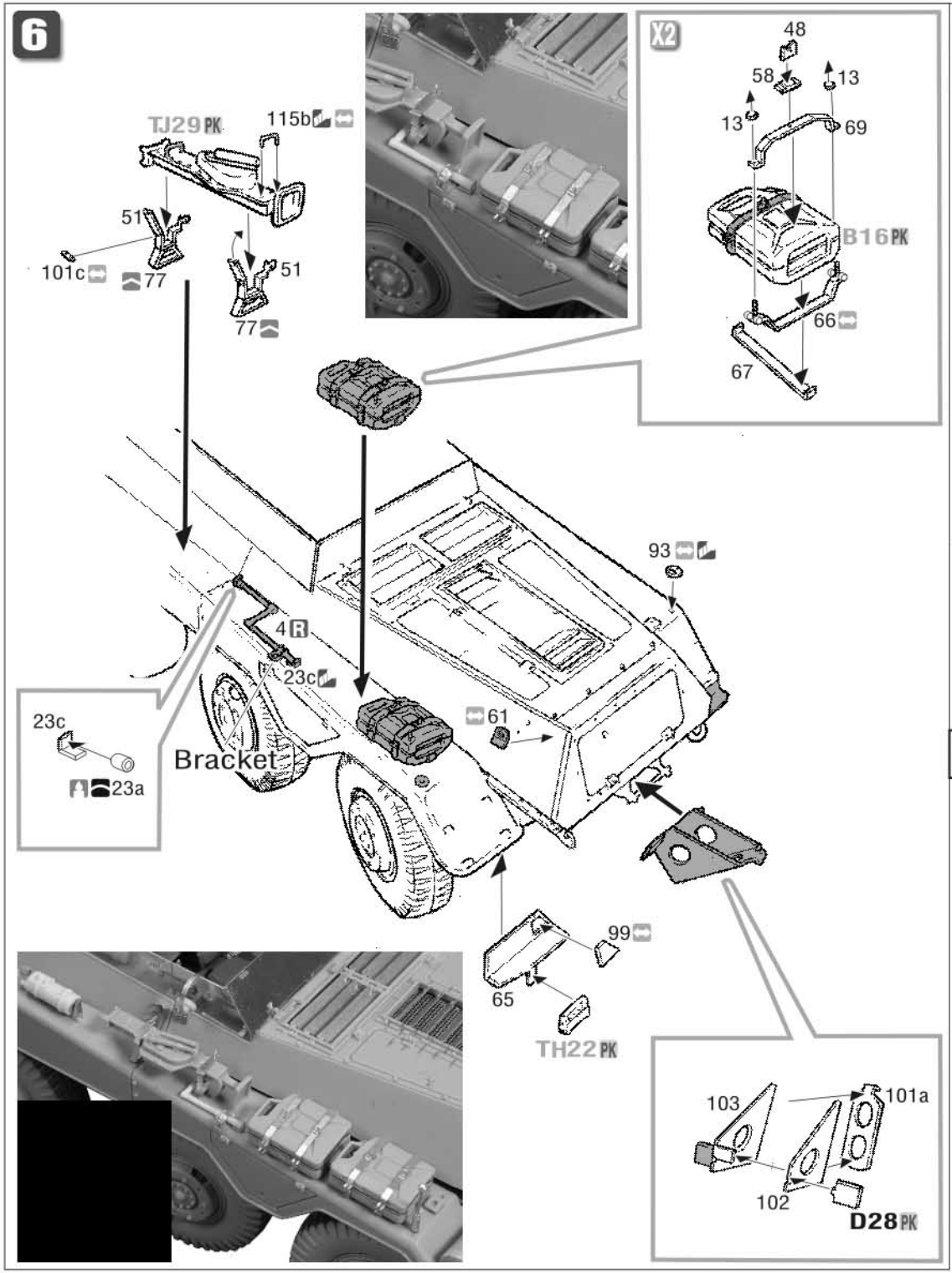

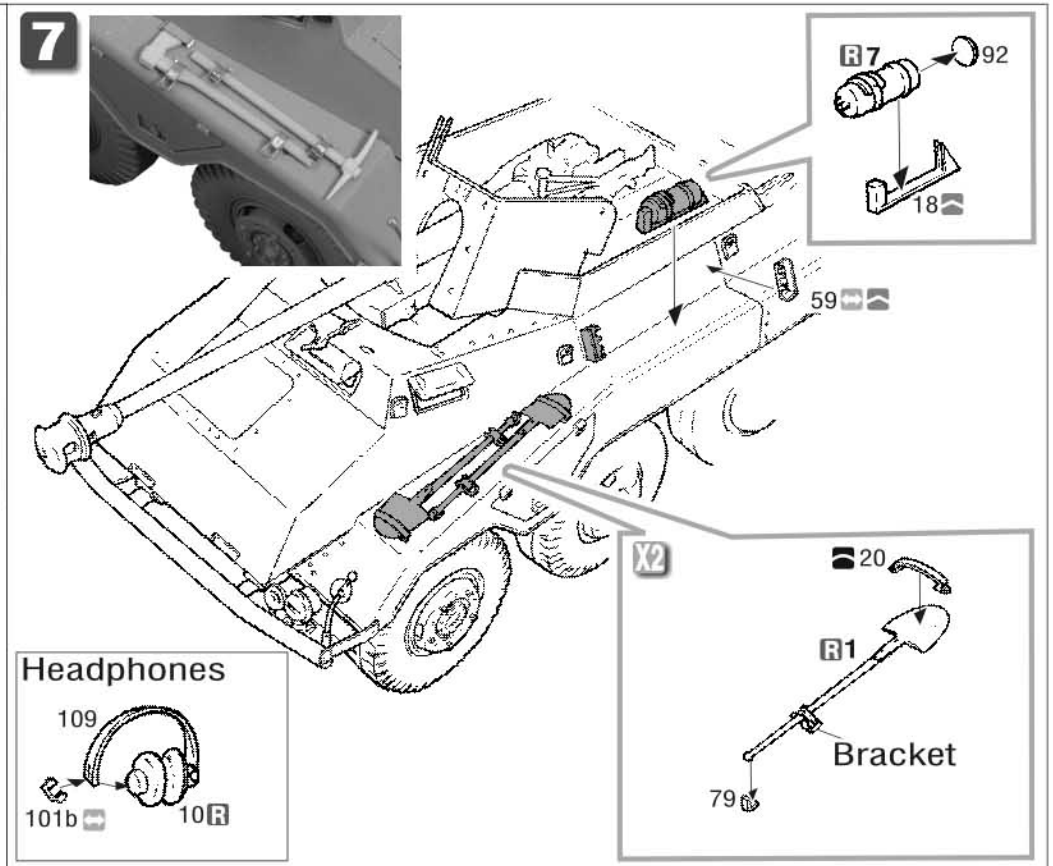

ROYAL MODEL - PO BOX 25 - 95039 TRECASTAGNI (CT) ITALY Tel. +39 95 780 0707-Fax +39 95 780 99 11
E-mail: info@royalmodel.com - Internet: www.royalmodel.com
©(2007) ROYAL MODEL