ROYAL MODEL
DIORAMA ACCESSORIES

ITEM NO. 481

MICRODETAILS SET
1/35 Scale

GERMAN 12.8cm SELBSTFAHRLAFETTE L/61 "STURER EMIL"

The parts included in this kit are to be assembled in conjunction with the TRUMPETER kit No.00350. For best results in the assembling of photo-etched and resin parts use cyanoacrylate glue. Always remember to use cyanoacrylate glue in a well ventilated area. Before assembling be sure to remove all the parts to be substituted with photo-etched parts. It is advisable before assembling to study well the instructions which accompany this kit plus any other sufficient documentation.It is advise to heat the metal parts before glueing, once the metal is hot it will be easier to bend.

REPEAT SAME OPERATION FOR THE OTHER SIDE
R RESIN PART
TO BEND
X2 MAKE 2 PIECES
ADD ROD
REMOVE OR SUBSTITUTE THE PLASTIC KIT PART WITH ROYAL MODEL PART
? FACULTATIVE
TO FOLD
PK PLASTIC KIT PART
ADD NUT

If ulterior details are required for your model it is possible to use added set ROYAL MODEL no. 481.

1

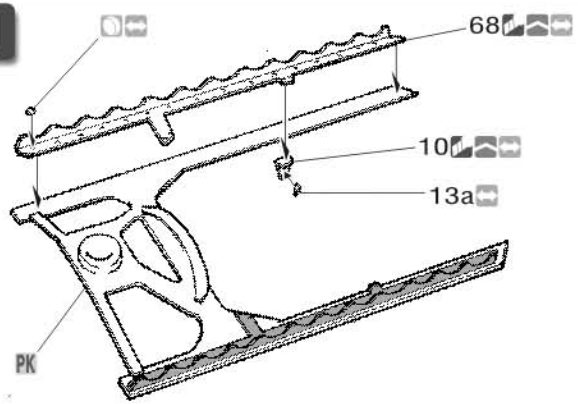

2

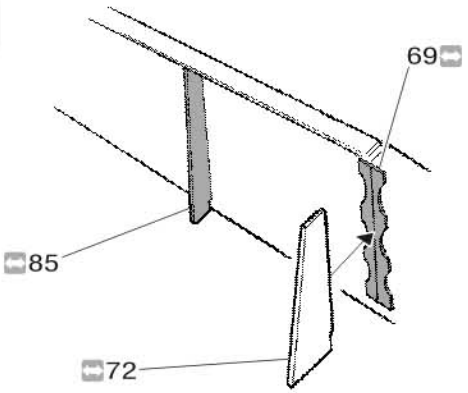

3

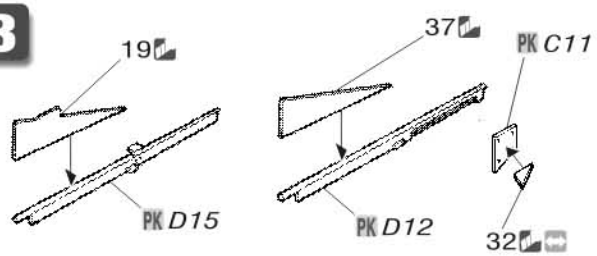

X4

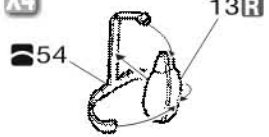

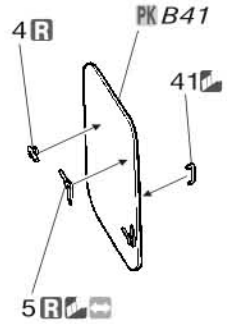

X2

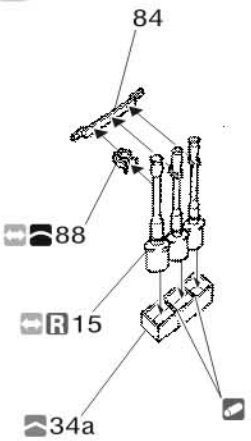

4

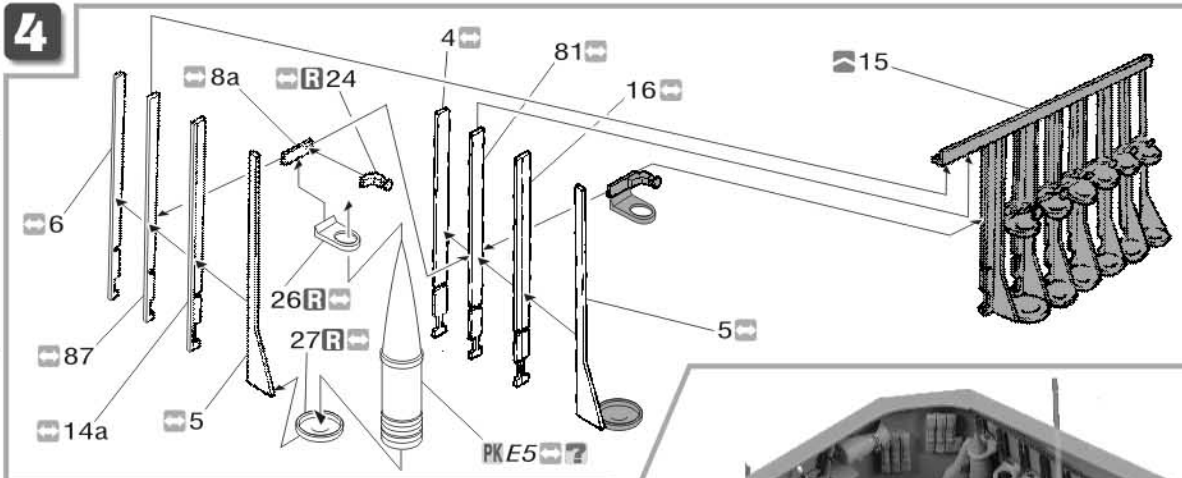

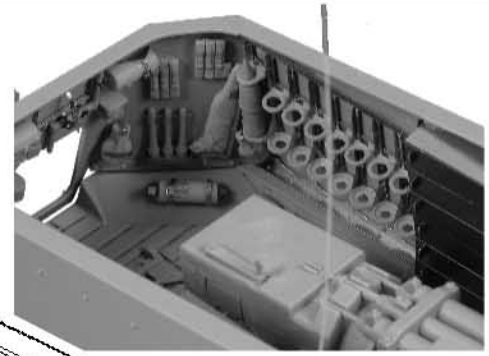

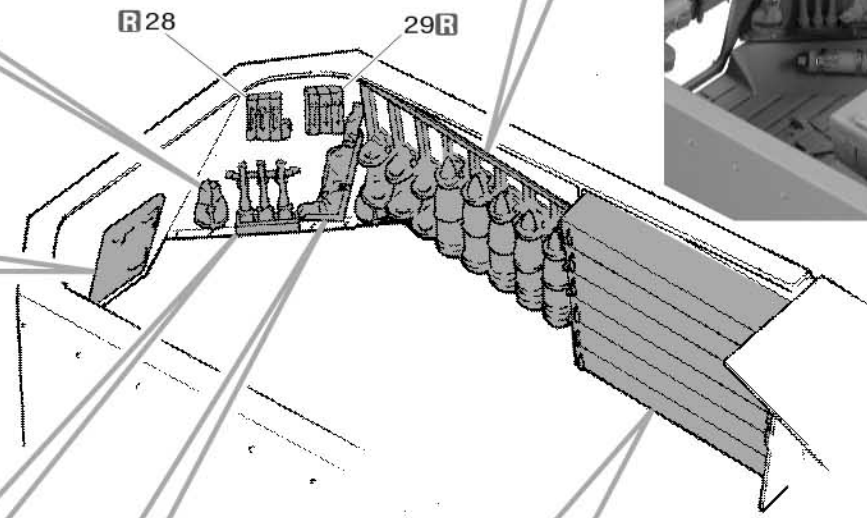

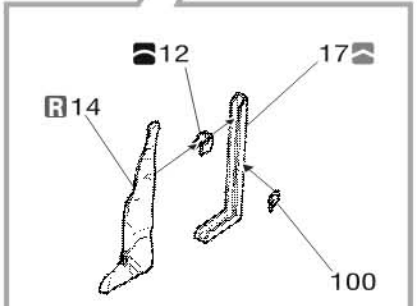

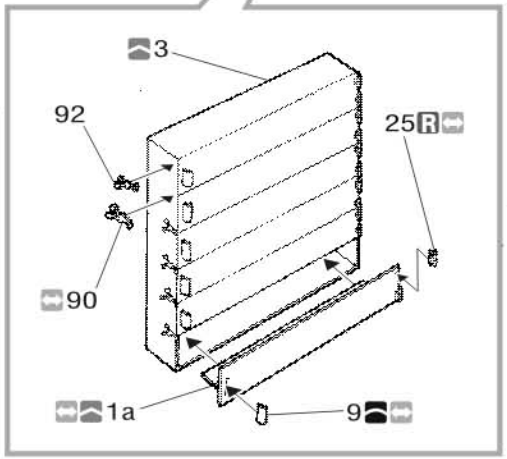

5

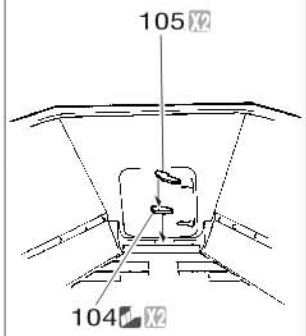

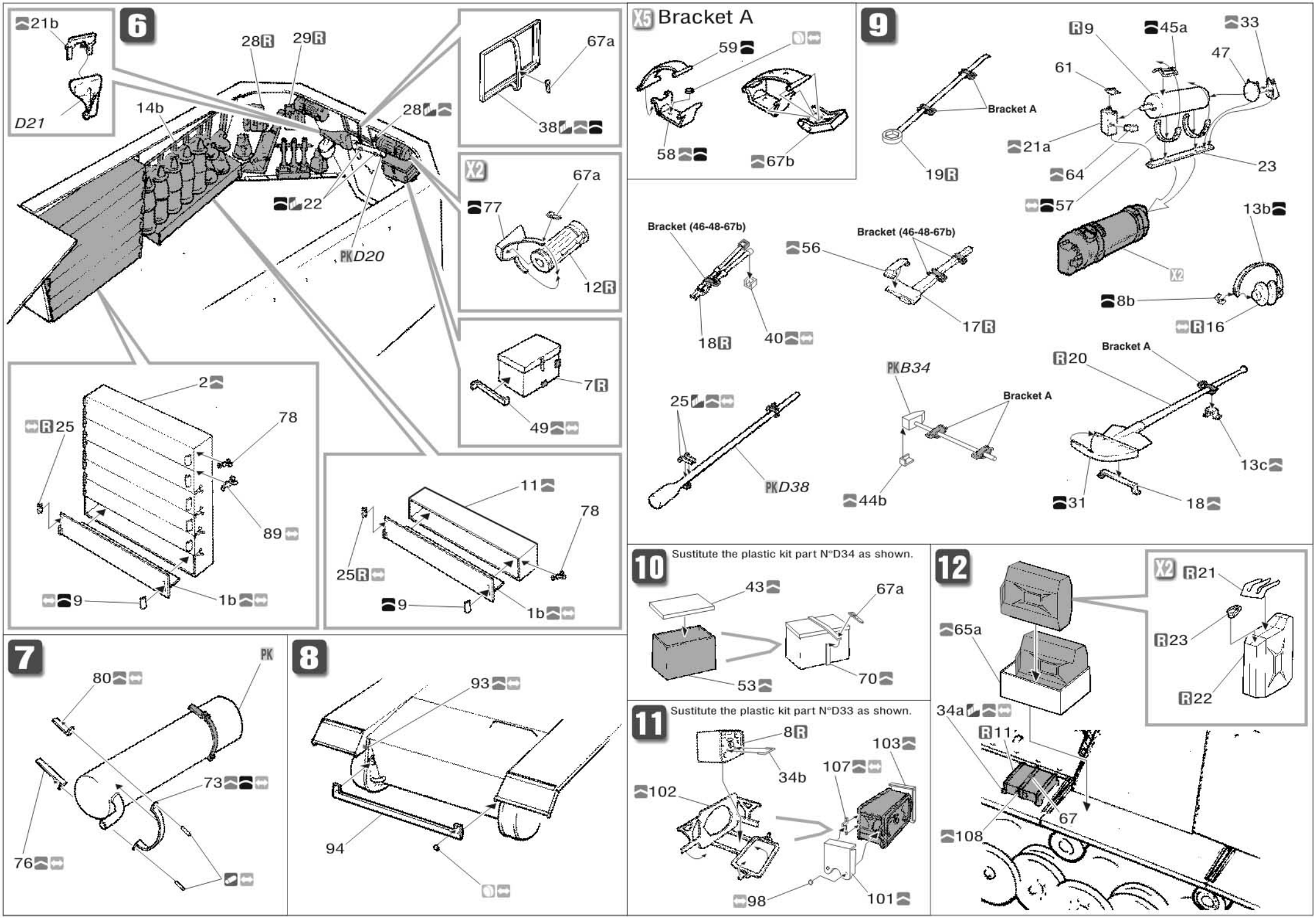
6
21b
D21
28R
29R
14b
28
22
PKD20
67a
38
X2
67a
77
12R
7R
49
2
R25
78
89
9
1b
11
78
25R
9
1b
7
PK
80
73
76
8
93
94
X5 Bracket A
59
58
67b
9
Bracket A
19R
R9
45a
33
47
61
21a
64
23
57
13b
X2
8b
R16
Bracket (46-48-67b)
18R
40
56
Bracket (46-48-67b)
17R
25
PKD38
PKB34
Bracket A
44b
Bracket A
R20
13c
31
18
10
Sustitute the plastic kit part N°D34 as shown.
43
67a
53
70
11
Sustitute the plastic kit part N°D33 as shown.
8R
34b
103
107
102
98
101
12
X2
R21
R23
R22
65a
34a
R11
67
108

Substitute the palstic kit part N°B29 as shown.

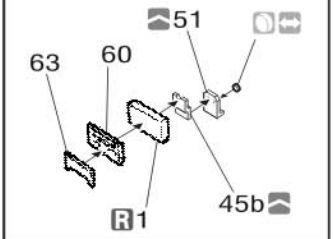

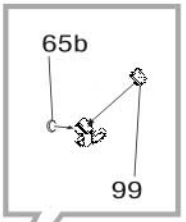

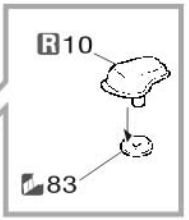

13

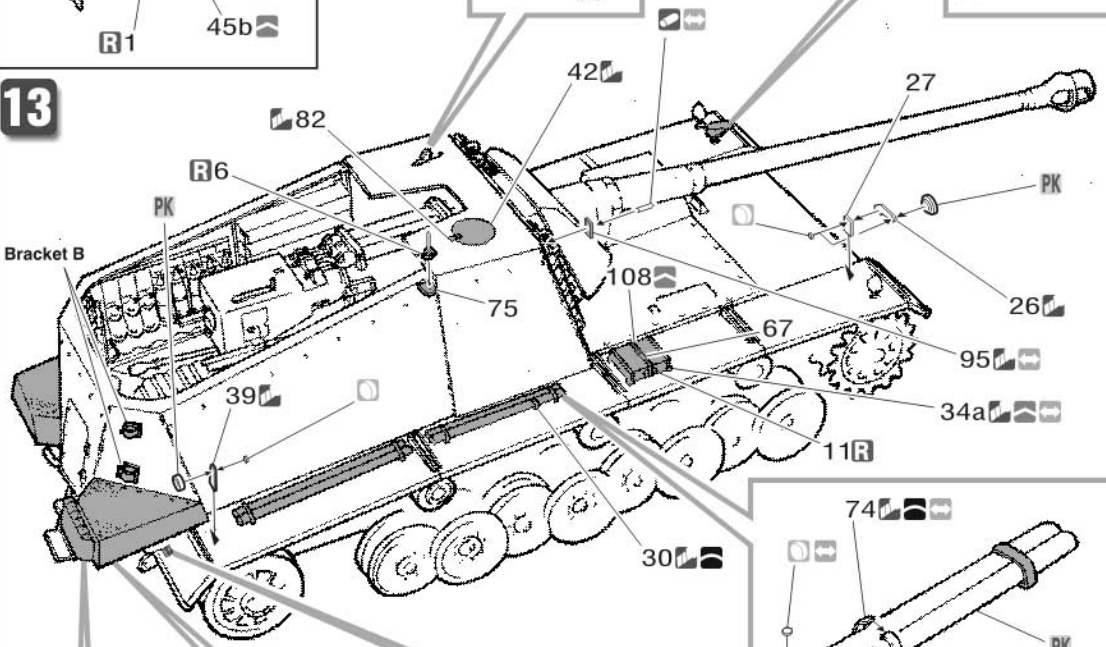

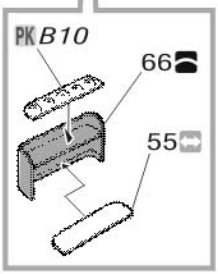

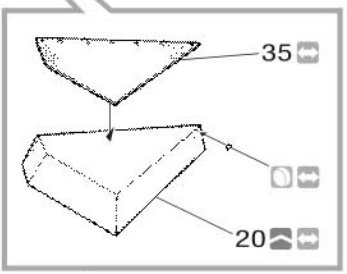

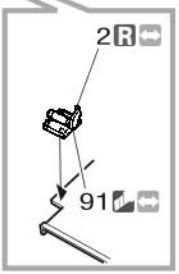



14 Wheels painting.

*Before painting the wheel frame colour the whole wheel black.

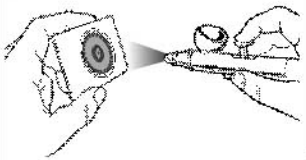

Hold template no. 96-97-106 still in position with finger tips and spray wheil frame with paint of desidered colour as shown above.

X2 Bracket B

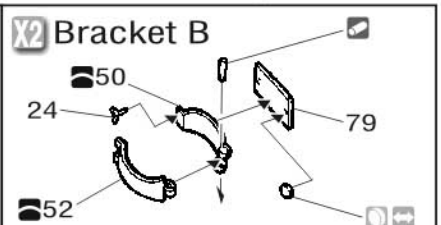

ROYAL MODEL - PO BOX 25 - 95039 TRECASTAGNI (CT) ITALY Tel. +39 95 780 0707-Fax +39 95 780 99 11
E-mail: info@royalmodel.com - Internet: www.royalmodel.com
©(2006) ROYAL MODEL