ROYAL MODEL
DIORAMA ACCESSORIES

ITEM NO. 477

MICRODETAILS SET
1/48 Scale

STUG III Ausf.B (Sd.Kfz. 142)

The parts included in this kit are to be assembled in conjunction with the TAMIYA kit No.32507. For best results in the assembling of photo-etched and resin parts use cyanoacrylate glue. Always remember to use cyanoacrylate glue in a well ventilated area. Before assembling be sure to remove all the parts to be substituted with photo-etched parts. It is advisable before assembling to study well the instructions which accompany this kit plus any other sufficient documentation. It is advise to heat the metal parts before glueing, once the metal is hot it will be easier to bend.

REMOVE OR SUBSTITUTE THE PLASTIC KIT PART WITH ROYAL MODEL PART | REPEAT SAME OPERATION FOR THE OTHER SIDE | FACULTATIVE | TO FOLD | TO BEND | PK PLASTIC KIT PART | ADD ROD | ADD NUT

BRACKET

For a easy assembly you can use in alternative the part NO.6-23 as shown.

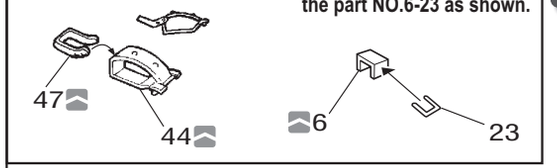

1

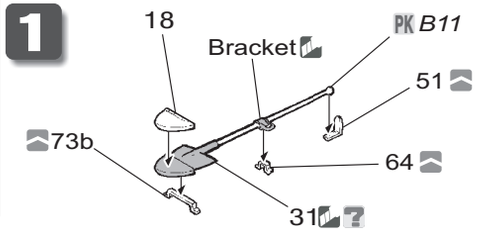

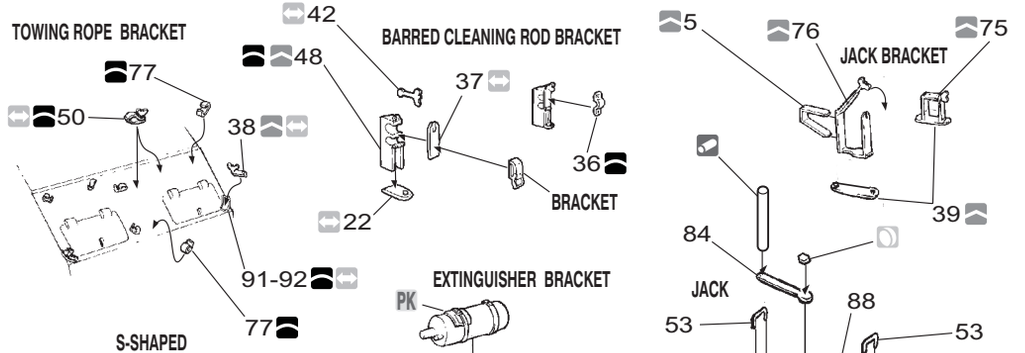

2

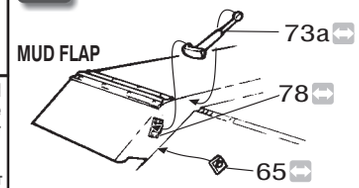

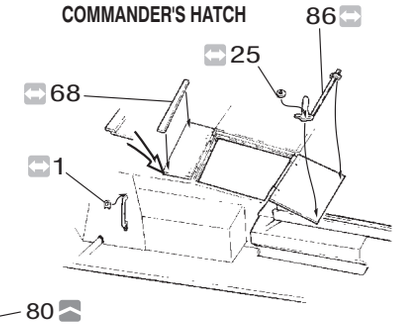

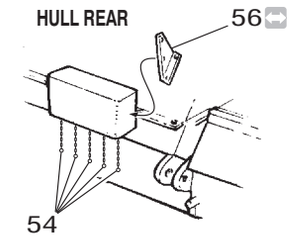

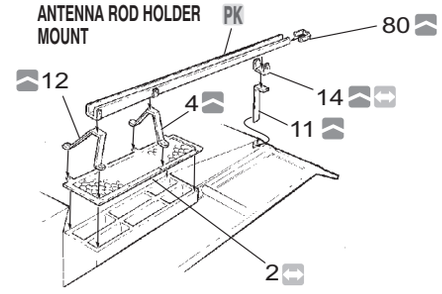

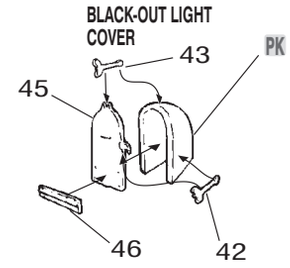

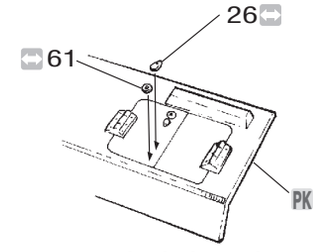

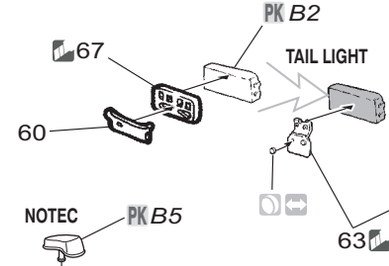

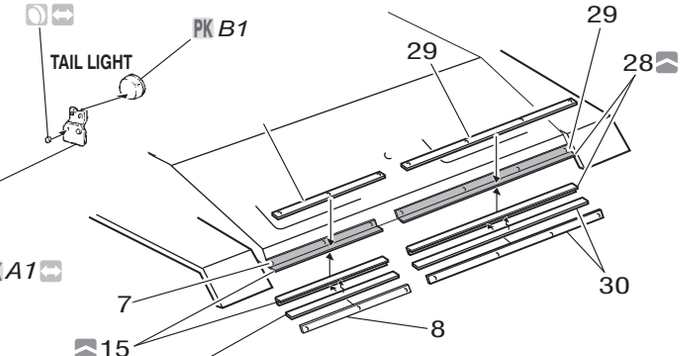

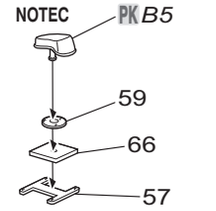

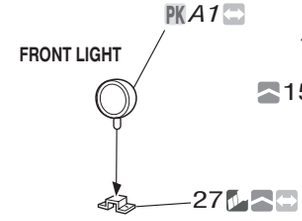

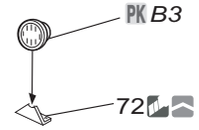

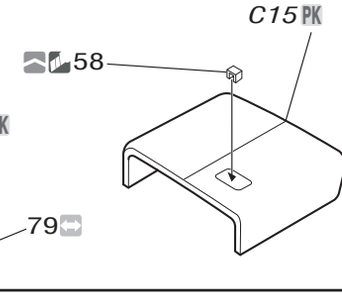

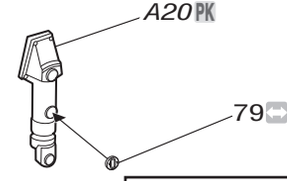

3 Wheels painting.

*Before painting the wheel frame colour the whole wheel black.

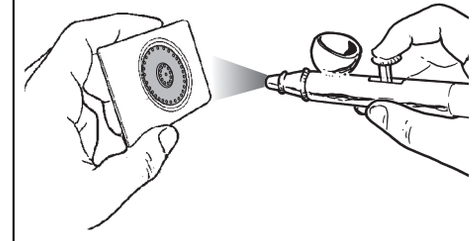

Hold template no. A,B still in position with finger tips and spray whell frame with paint of desidered colour as shown above.

ROYAL MODEL - PO BOX 25 - 95039 TRECASTAGNI (CT) ITALY Tel. +39 95 780 0707-Fax +39 95 780 99 11
E-mail: info@royalmodel.com - Internet: www.royalmodel.com
©(2006) ROYAL MODEL