ROYAL MODEL
DIORAMA ACCESSORIES

ITEM NO. 476

MICRODETAILS SET
1/48 Scale

HETZER 38(t) Middle Production

The parts included in this kit are to be assembled in conjunction with the TAMIYAkit No.32511. For best results in the assembling of photo-etched parts use cyanoacrylate glue. Always remember to use cyanoacrylate glue in a well ventilated area. Before assembling be sure to remove all the parts to be substituted with photo-etched parts. It is advisable before assembling to study well the instructions which accompany this kit plus any other sufficient documentation. It is advise to heat the metal parts before glueing, once the metal is hot it will be easier to bend.

- REPEAT SAME OPERATION FOR THE OTHER SIDE
- REMOVE OR SUBSTITUTE THE PLASTIC KIT PART WITH ROYAL MODEL PART
- PK PLASTIC KIT PART
- X2 MAKE 2 PIECES
- TO BEND
- TO FOLD
- ADD ROD
- ADD NUT

1

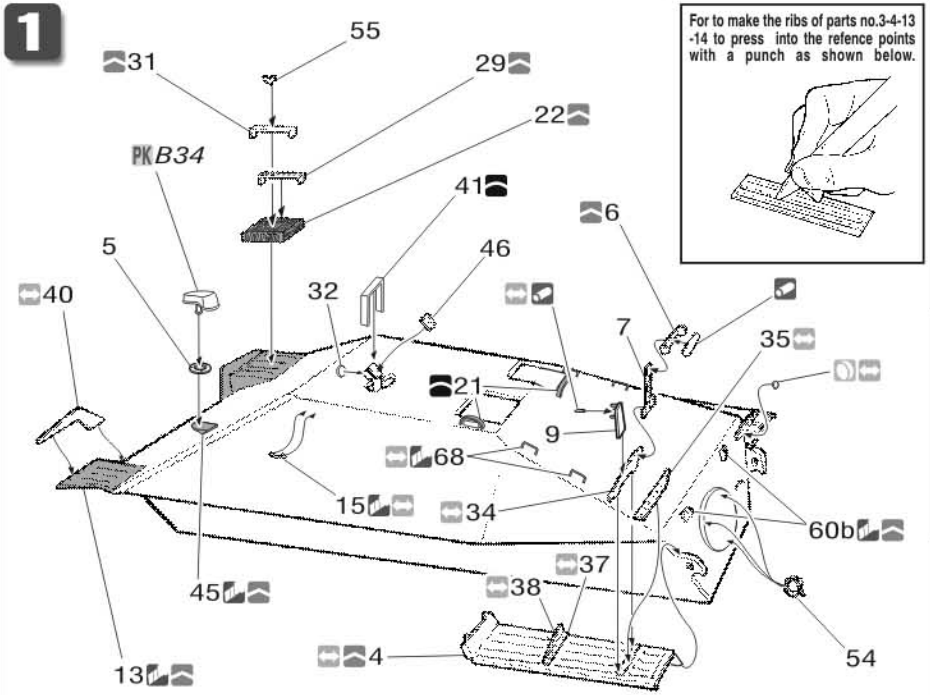

For to make the ribs of parts no.3-4-13 -14 to press into the refence points with a punch as shown below.

2

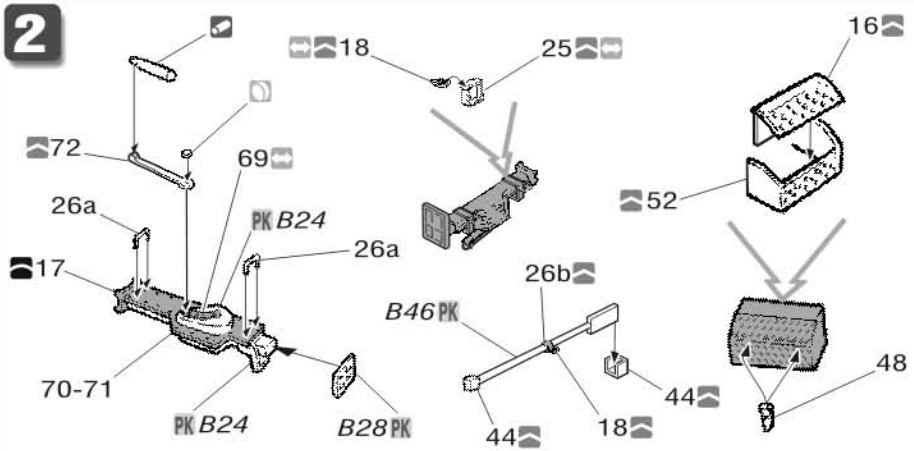

3

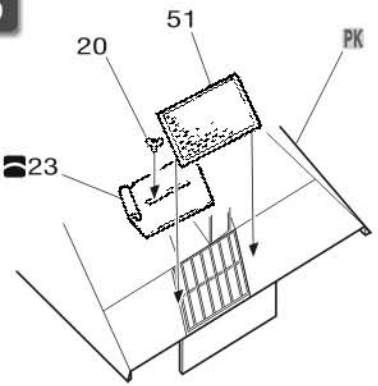

4

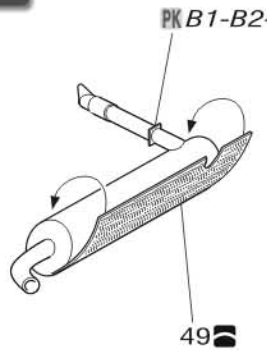

5

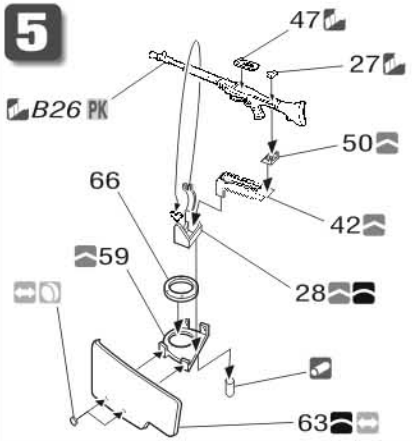

6



7

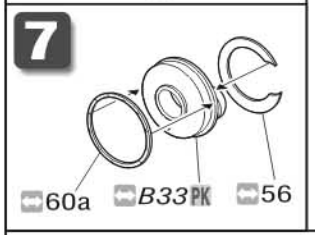

8

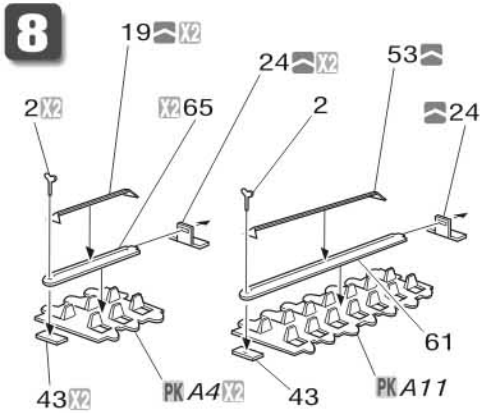

9 Wheels painting.

*Before painting the wheel frame colour the whole wheel black.

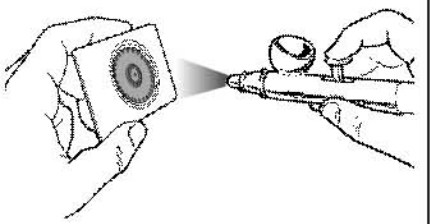

Hold template no. C still in position with finger tips and spray whell frame with paint of desidered colour as shown above.

10

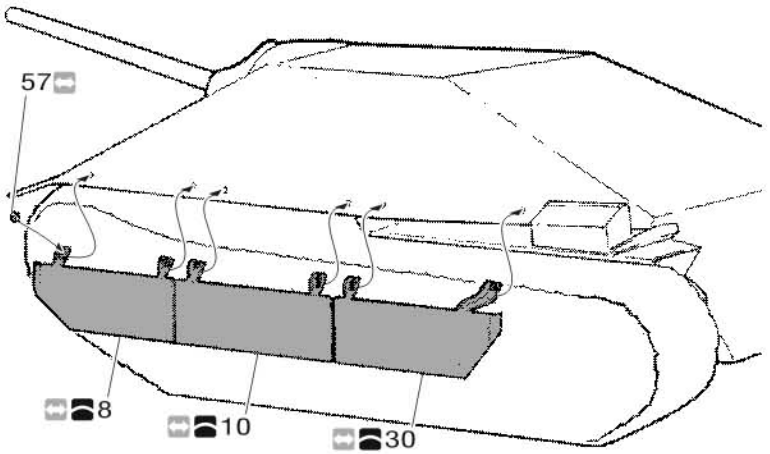





ROYAL MODEL - PO BOX 25 - 95039 TRECASTAGNI (CT) ITALY Tel. +39 95 780 0707-Fax +39 95 780 99 11
E-mail: info@royalmodel.com - Internet: www.royalmodel.com
©(2006) ROYAL MODEL