ROYAL MODEL ®
DIORAMA ACCESSORIES

NO. 464

FORD G.P.A. JEEP

(Details set for the Tamiya kit no. 3543-kit in 1/35 scale)

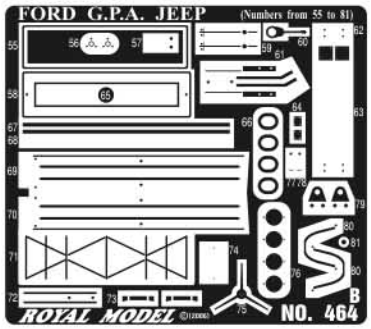

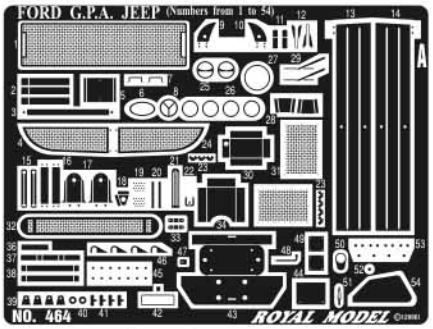

Same in other side | (S) Substitute | Add nut
Remove | Bend | (P) Plastic kit part | Add rod

1

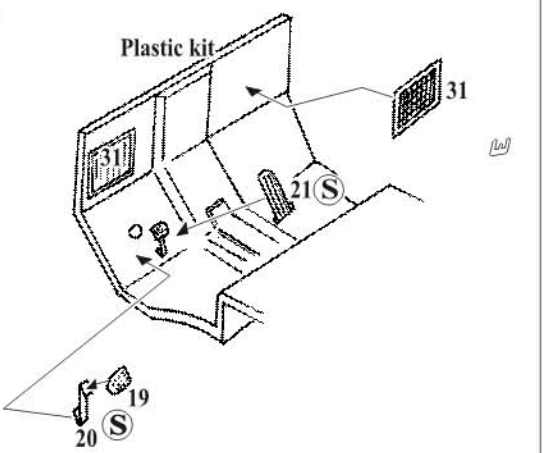

2

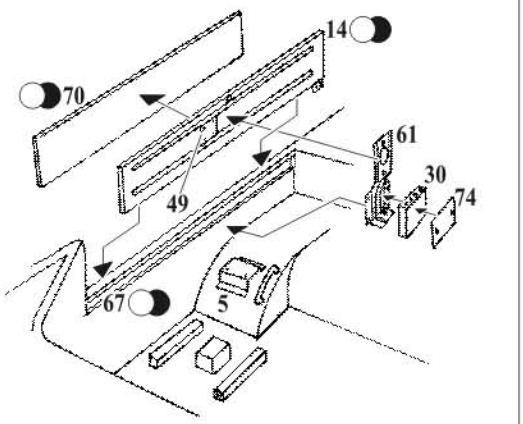

3

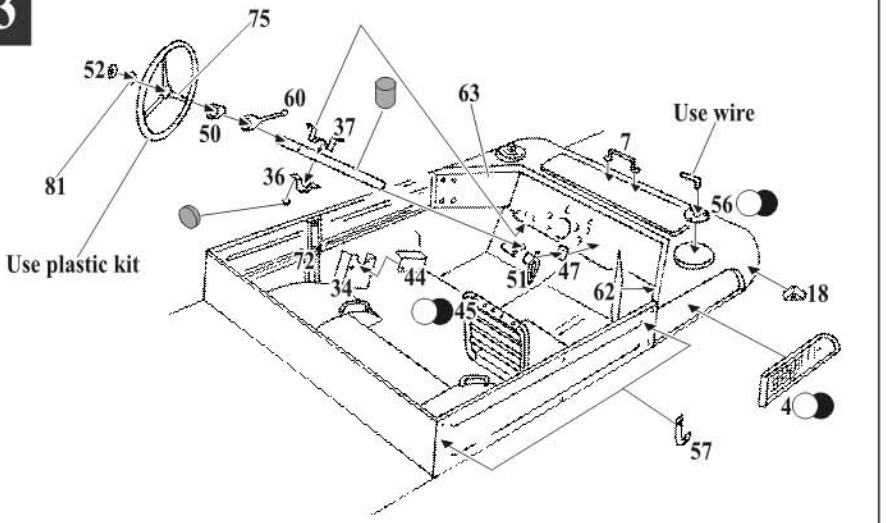

4

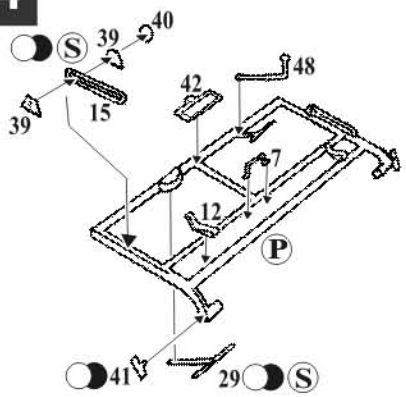

5

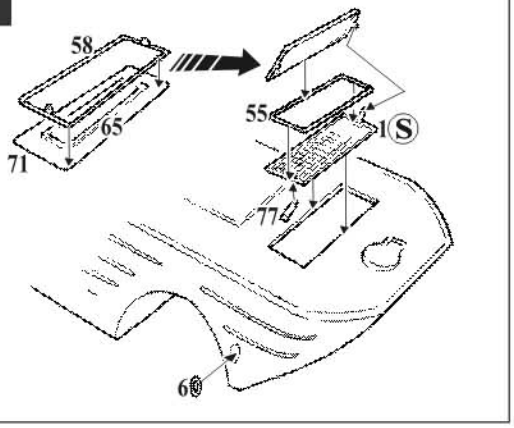

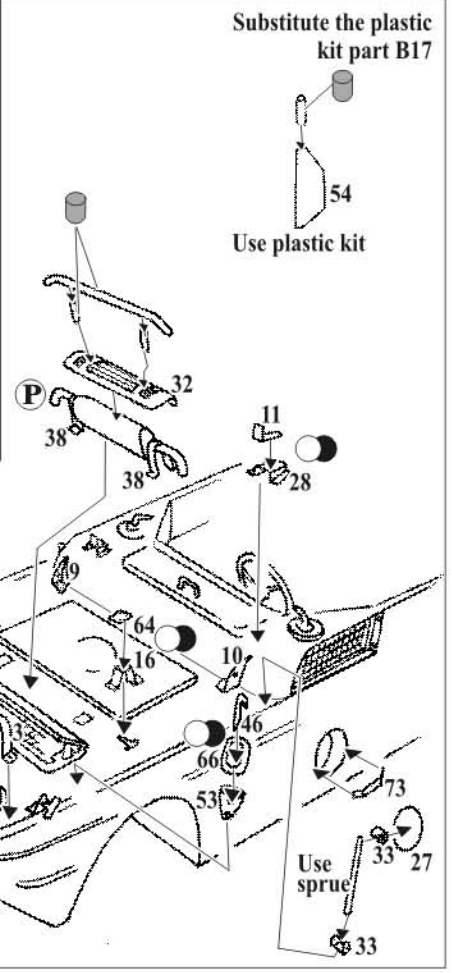

6

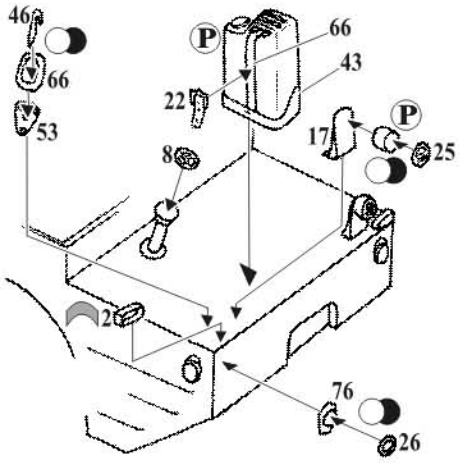

ROYAL MODEL - PO BOX 25-95039 TRECASTAGNI (CT) ITALY Tel. +39957800707-Fax +39957809911
E-mail: info@royalmodel.com - Internet: www.royalmodel.com
© (2006) ROYAL MODEL