ROYAL MODEL
DIORAMA ACCESSORIES

ITEM NO. 435

MICRODETAILS SET
1/48 Scale

TIGER I EARLY PRODUCTION (part1)

The parts included in this kit are to be assembled in conjunction with the TAMIYA kit No.32504. For best results in the assembling of photo-etched and resin parts use cyanoacrylate glue. Always remember to use cyanoacrylate glue in a well ventilated area. Before assembling be sure to remove all the parts to be substituted with photo-etched parts. It is advisable before assembling to study well the instructions which accompany this kit plus any other sufficient documentation. It is advise to heat the metal parts before glueing, once the metal is hot it will be easier to bend.

REPEAT SAME OPERATION FOR THE OTHER SIDE
FACULTATIVE
TO FOLD
TO BEND
ADD ROD
REMOVE OR SUBSTITUTE THE PLASTIC KIT PART WITH ROYAL MODEL PART
MAKE 2 PIECES
RESIN PART
PLASTIC KIT PART
ADD NUT

If ulterior details are required for your model it is possible to use added set ROYAL MODEL no. 447.

1

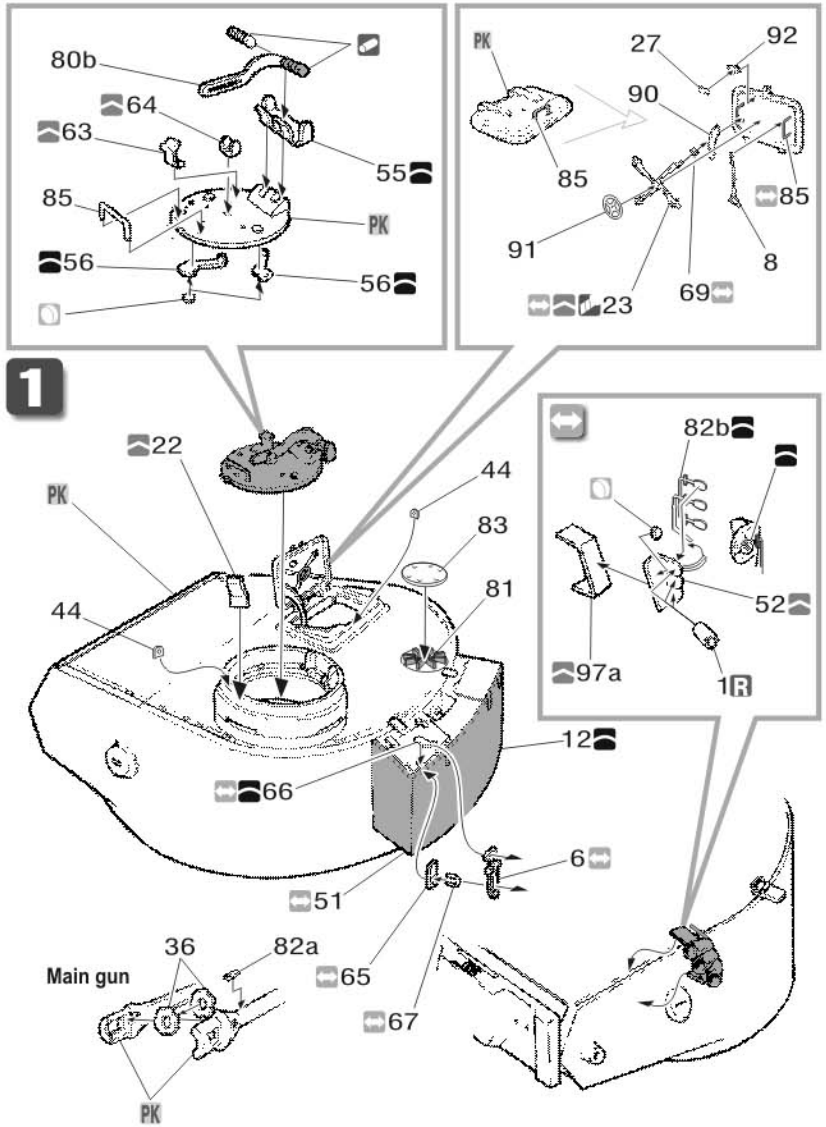

2

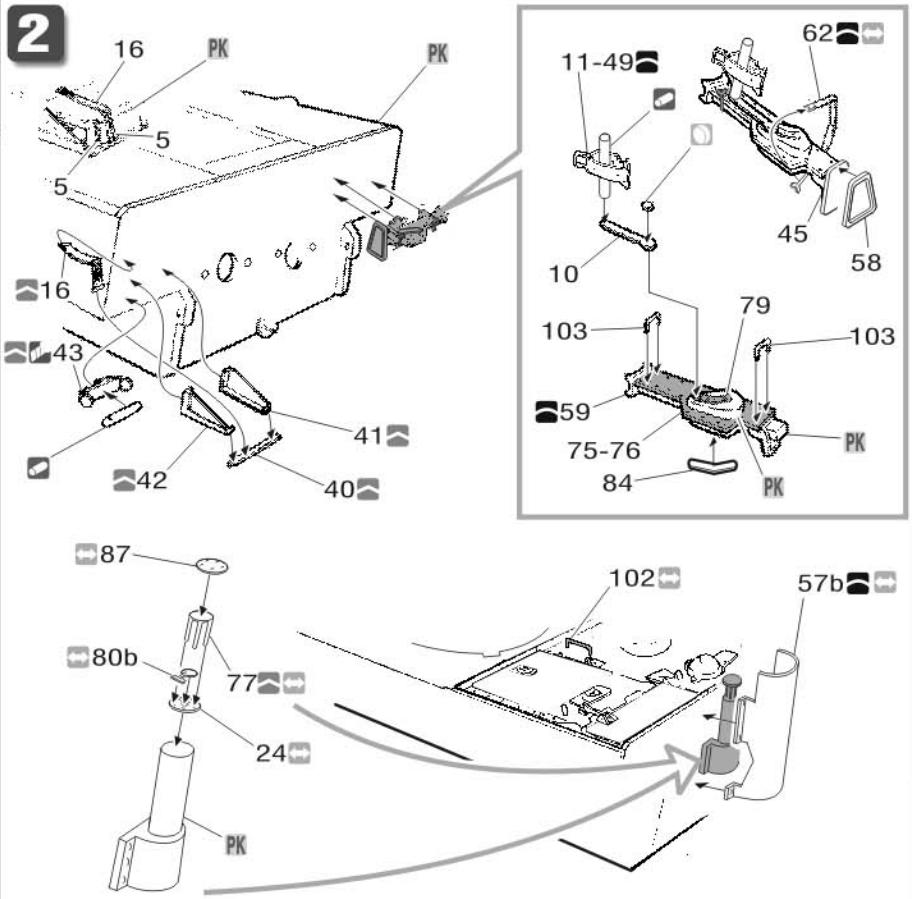

X7 Bracket

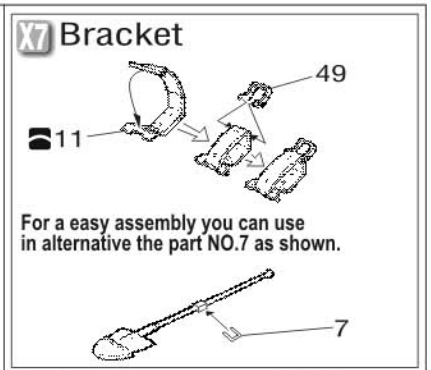

3

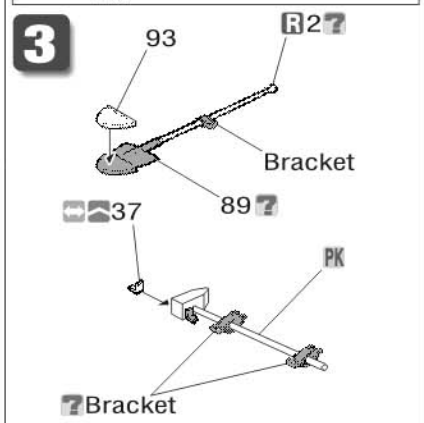

4

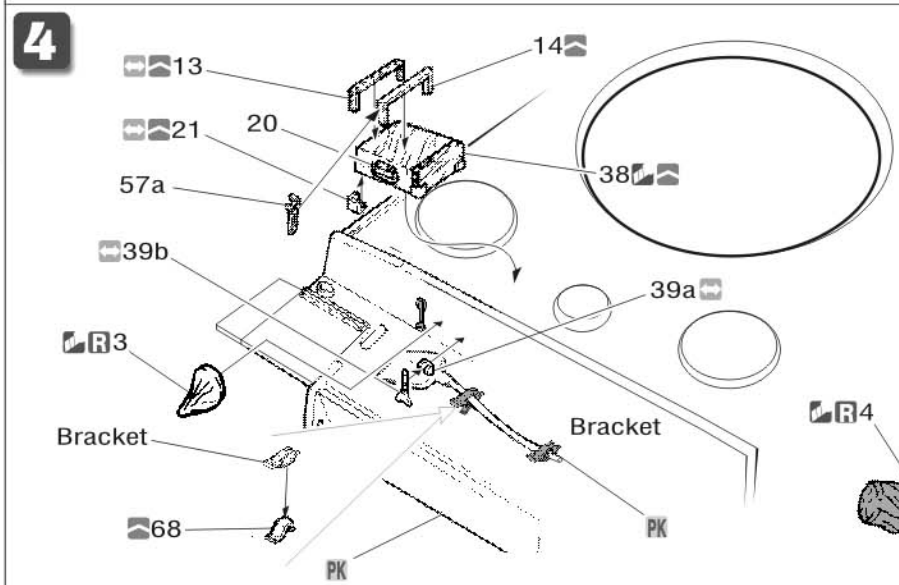

Rear fenders details assembly.

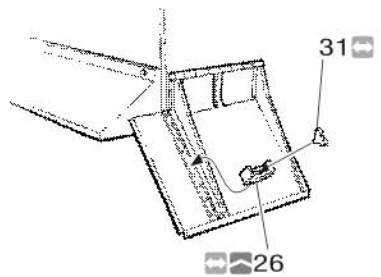

Front fenders details assembly.

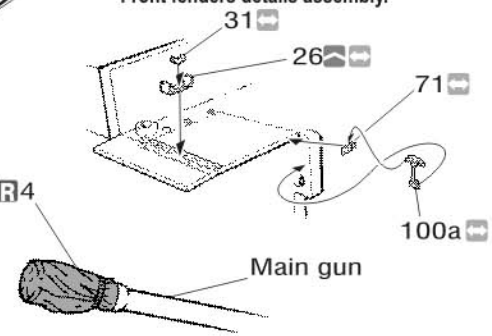

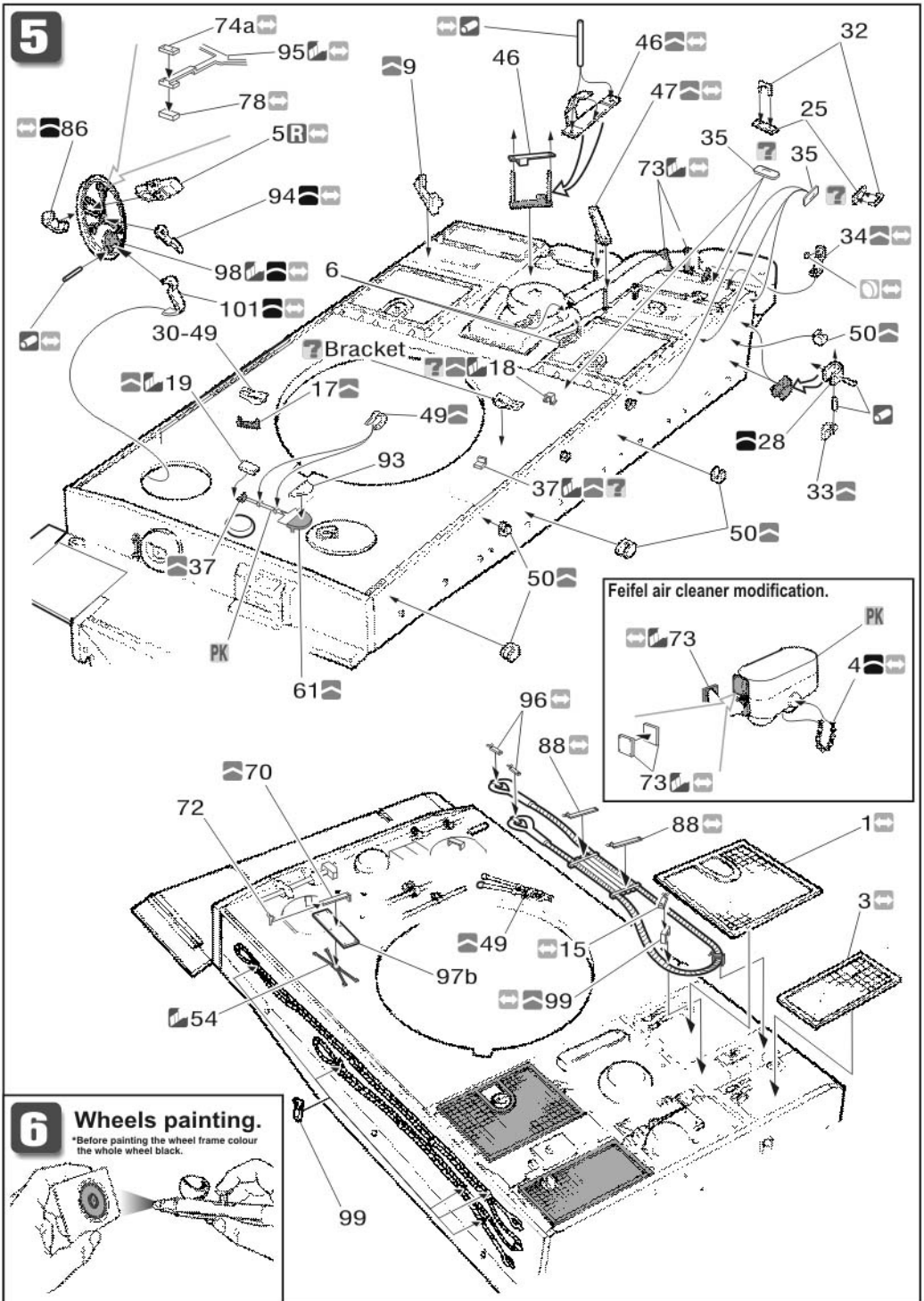

ROYAL MODEL - PO BOX 25 - 95039 TRECASTAGNI (CT) ITALY Tel. +39 95 780 0707-Fax +39 95 780 99 11
E-mail: info@royalmodel.com - Internet: www.royalmodel.com
©(2005) ROYAL MODEL