ROYAL MODEL
DIORAMA ACCESSORIES
Royal Model by Reale Roberto,
P.O. Box 25 - 95039 - Trecastagni (CT) ITALY

German King Tiger 1/35

microdetails set

The parts included in this kit are to be assembled in conjunction with the old Tamiya kit or Nichimo kit.
For best results in the assembling of photo-etched and resin parts use cyanoacrylate glue.
Always remember to use cyanoacrylate glue in a well ventilated area.
Before assembly be sure to remove all parts to be substituted with photo-etched.
It is advised before assembly to study well the instructions which accompany this MICRODETAILS SET plus any other sufficient documentation.
Note that some particulars illustrated in the instructions have been enlarged for easy identification.

○ Substitute the plastic part with the photo-etched part.
● Repeat same operation for the other side.
■ Do not used for Henschel version.
■ Do not used for Porsche version.

Turret details assembly

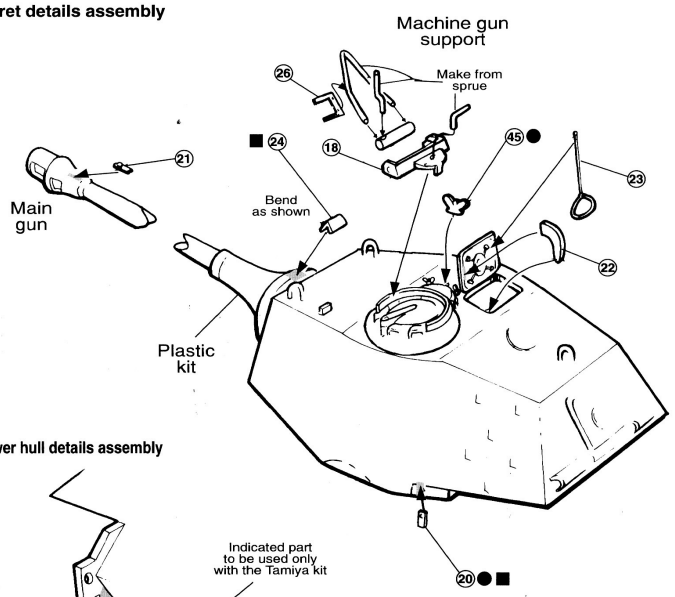

Lower hull details assembly

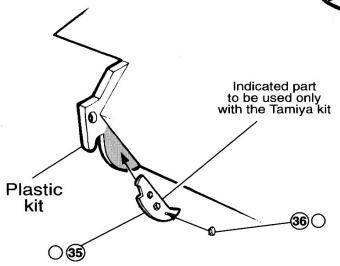

Upper hull details assembly

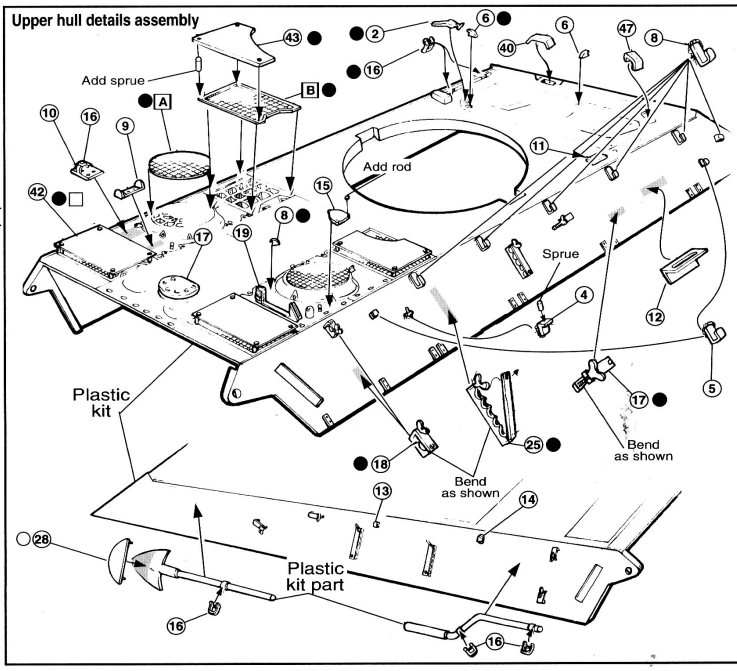

Turret Henschel version.

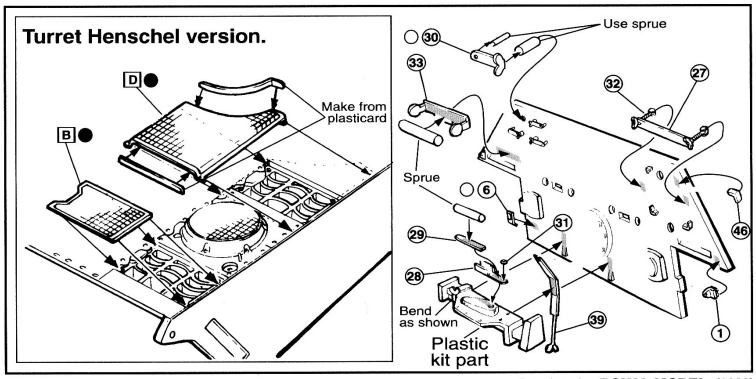

Drawings by **ROYAL MODEL** (1993)