ROYAL MODEL
DIORAMA ACCESSORIES
ITEM NO. 425

MICRODETAILS SET
1/72 Scale

JAGDPANTHER LATE VERSION

The parts included in this kit are to be assembled in conjunction with the Dragon kit No.7212. For best results in the assembling of photo-etched parts use cyanoacrylate glue. Always remember to use cyanoacrylate glue in a well ventilated area. Before assembling be sure to remove all the parts to be substituted with photo-etched parts. It is advisable before assembling to study well the instructions which accompany this kit plus any other sufficient documentation. It is advise to heat the metal parts before glueing, once the metal is hot it will be easier to bend.

REMOVE OR SUBSTITUTE THE PLASTIC KIT PART WITH ROYAL MODEL PART
REPEAT SAME OPERATION FOR THE OTHER SIDE
FACULTATIVE
MAKE 2 PIECES
PLASTIC KIT PART
ADD PLASTICARD STRUCTURE
TO BEND
TO FOLD
ADD NUT
ADD ROD

1 Tools rach details assembly.

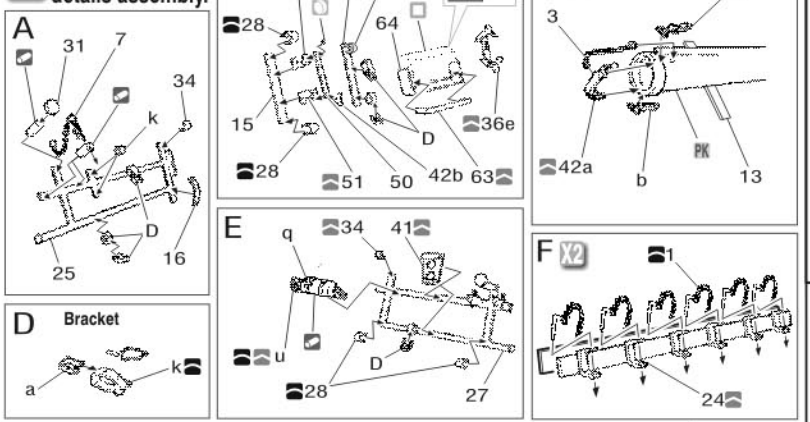

2

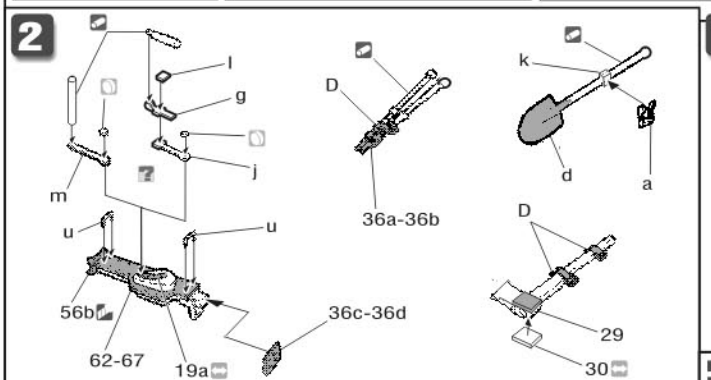

3

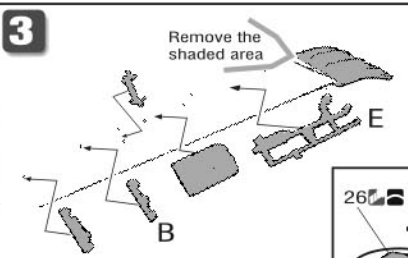

4

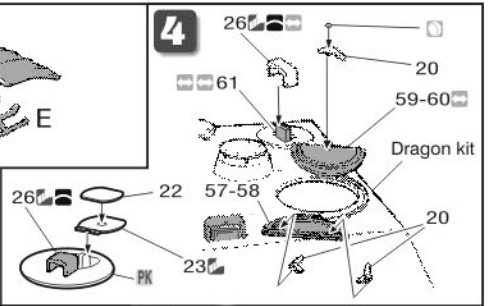

5

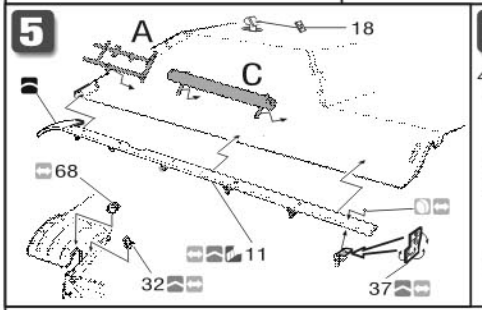

6

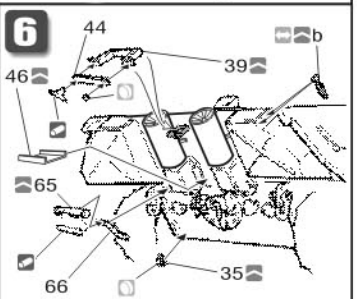

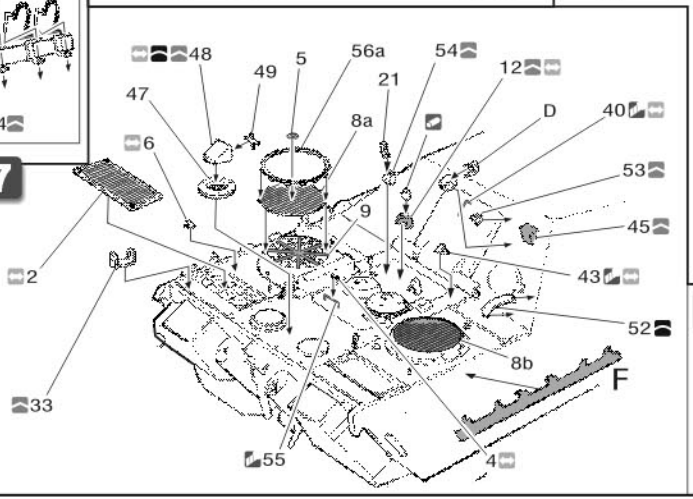

Mufflers details assembly.

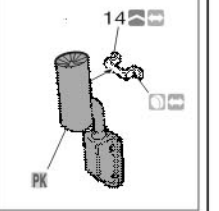

8

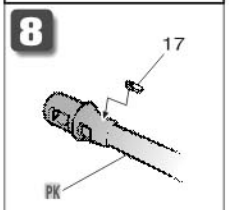

ROYAL MODEL - PO BOX 25 - 95039 TRECASTAGNI (CT) ITALY Tel. +39 95 780 0707-Fax +39 95 780 99 11
E-mail: info@royalmodel.com - Internet: www.royalmodel.com
©(2006) ROYAL MODEL