ROYAL MODEL
DIORAMA ACCESSORIES

ITEM NO. 418

MICRODETAILS SET
1/35 Scale

M-7 "PRIEST" (part 1)

The parts included in this kit are to be assembled in conjunction with the I kit Italeri No.206. For best results in the assembling of photo-etched and resin parts use cyanoacrylate glue. Always remember to use cyanoacrylate glue in a well ventilated area. Before assembling be sure to remove all the parts to be substituted with photo-etched parts. It is advisable before assembling to study well the instructions which accompany this kit plus any other sufficient documentation. It is advise to heat the metal parts before glueing, once the metal is hot it will be easier to bend.

For a best result of your model it is possible to use added set ROYAL MODEL no. 420-421.

TO FOLD
REPEAT SAME OPERATION FOR THE OTHER SIDE
THIS PART SUBSTITUTE THE PLASTIC PART N...
R RESIN PART
X2 MAKE 2 PIECES
ADD ROD
REMOVE OR SUBSTITUTE THE PLASTIC KIT PART WITH ROYAL MODEL PART
TO BE HEATED
? FACULTATIVE
FILE HOLE
PK PLASTIC KIT PART
ADD NUT

1

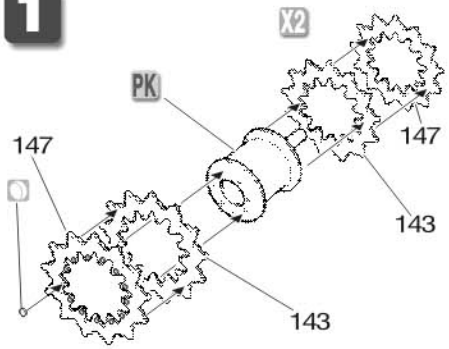

2

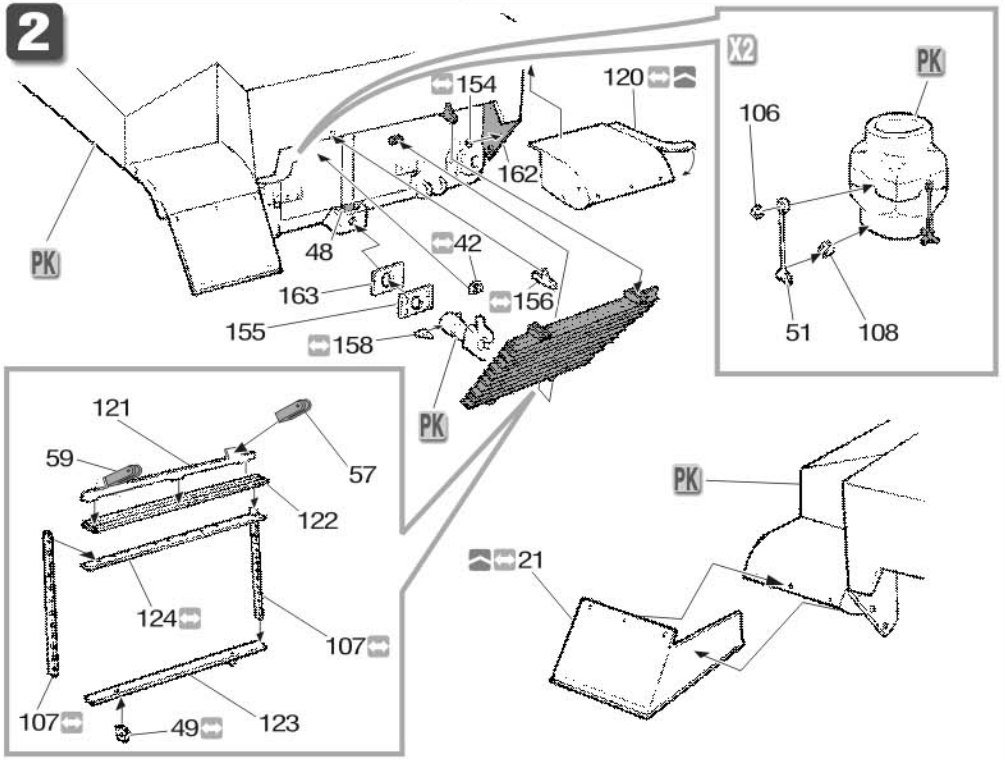

3

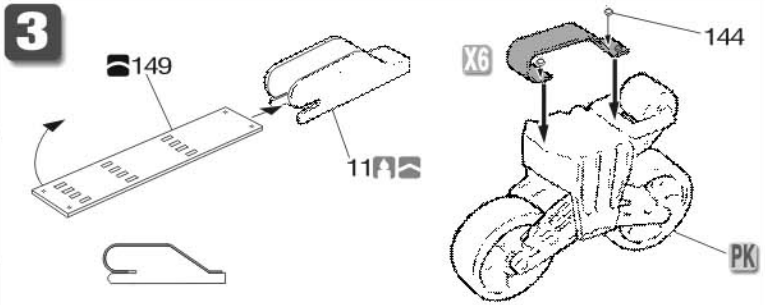

4



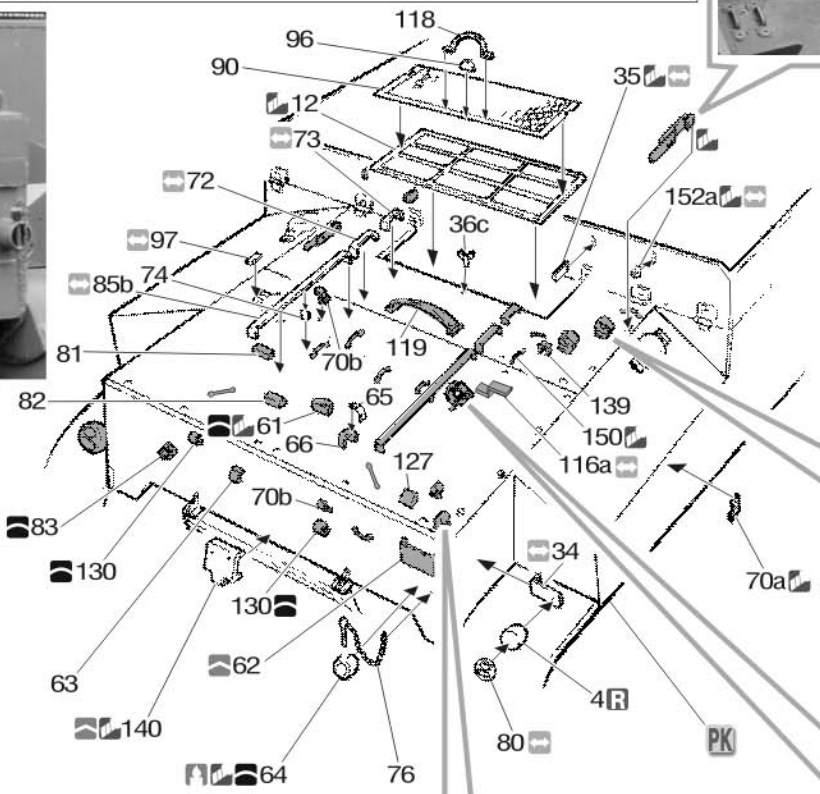

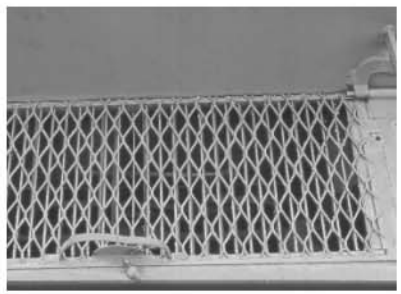

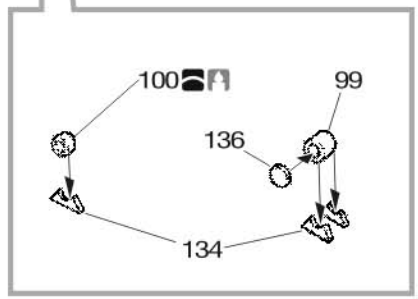

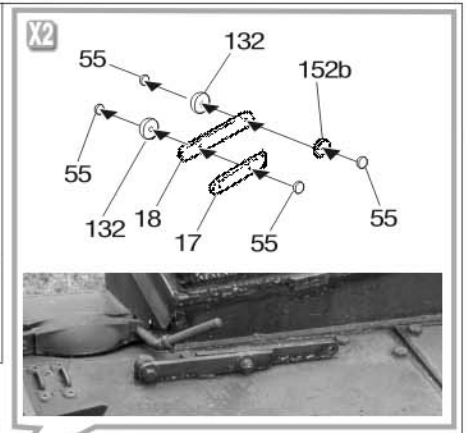

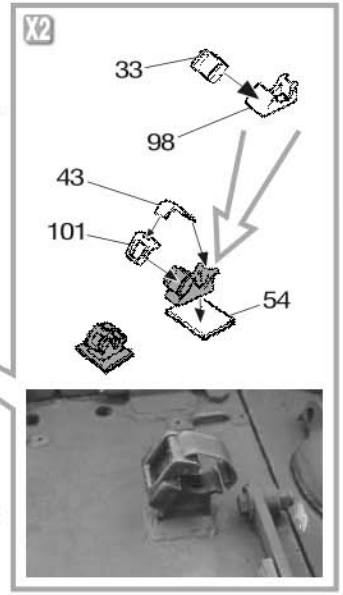

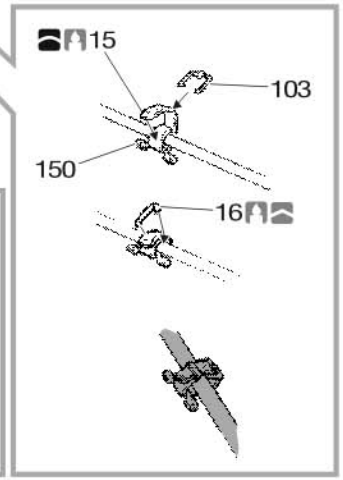

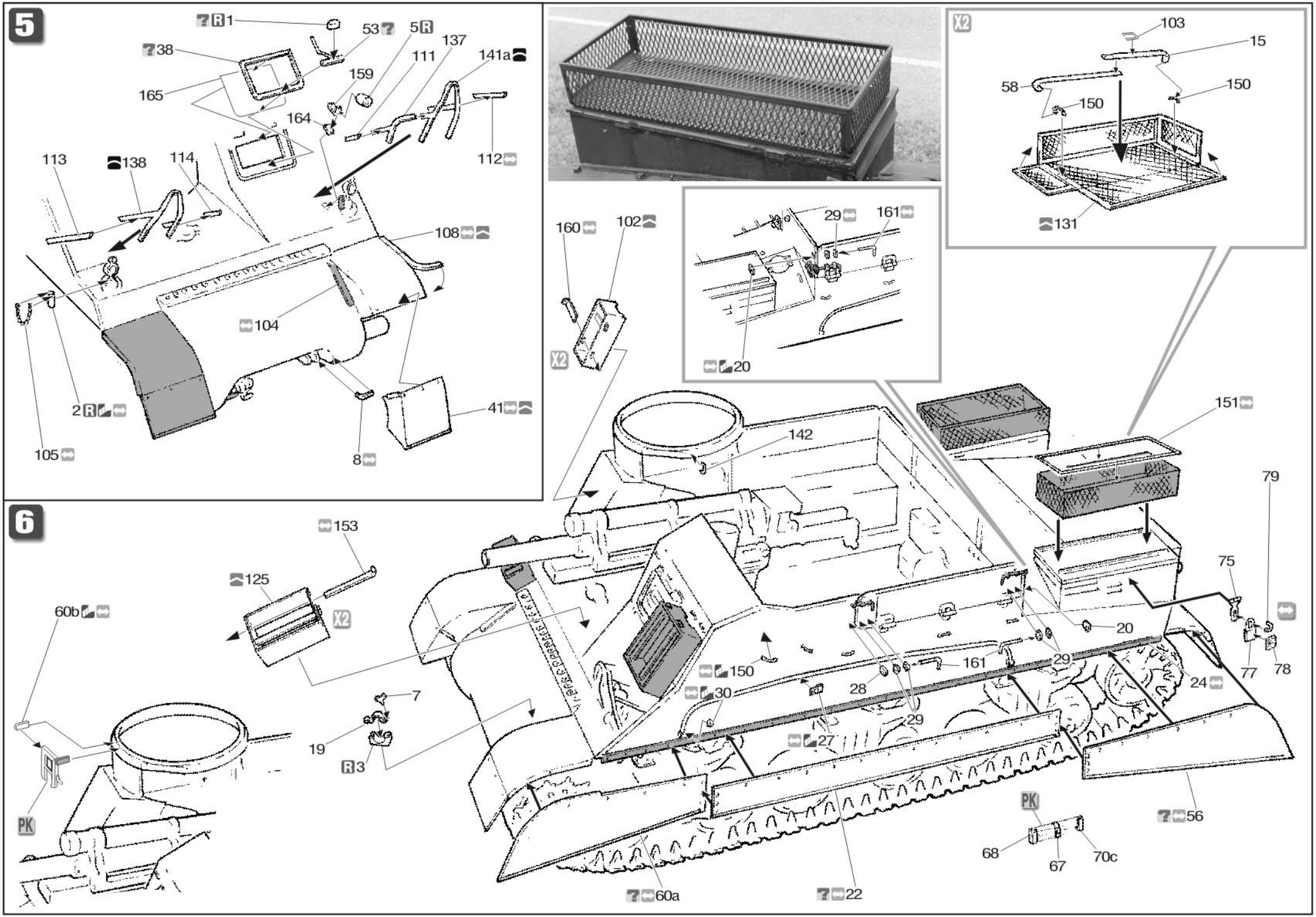
5
1
53
5
137
38
111
141a
159
165
164
112
113
138
114
108
104
2
41
105
8
103
15
58
150
150
131
160
102
29
161
20
X2
151
142
79
6
153
125
X2
60b
75
20
150
161
29
77
78
30
28
24
7
29
19
27
3
PK
PK
56
68
67
70c
60a
22

7

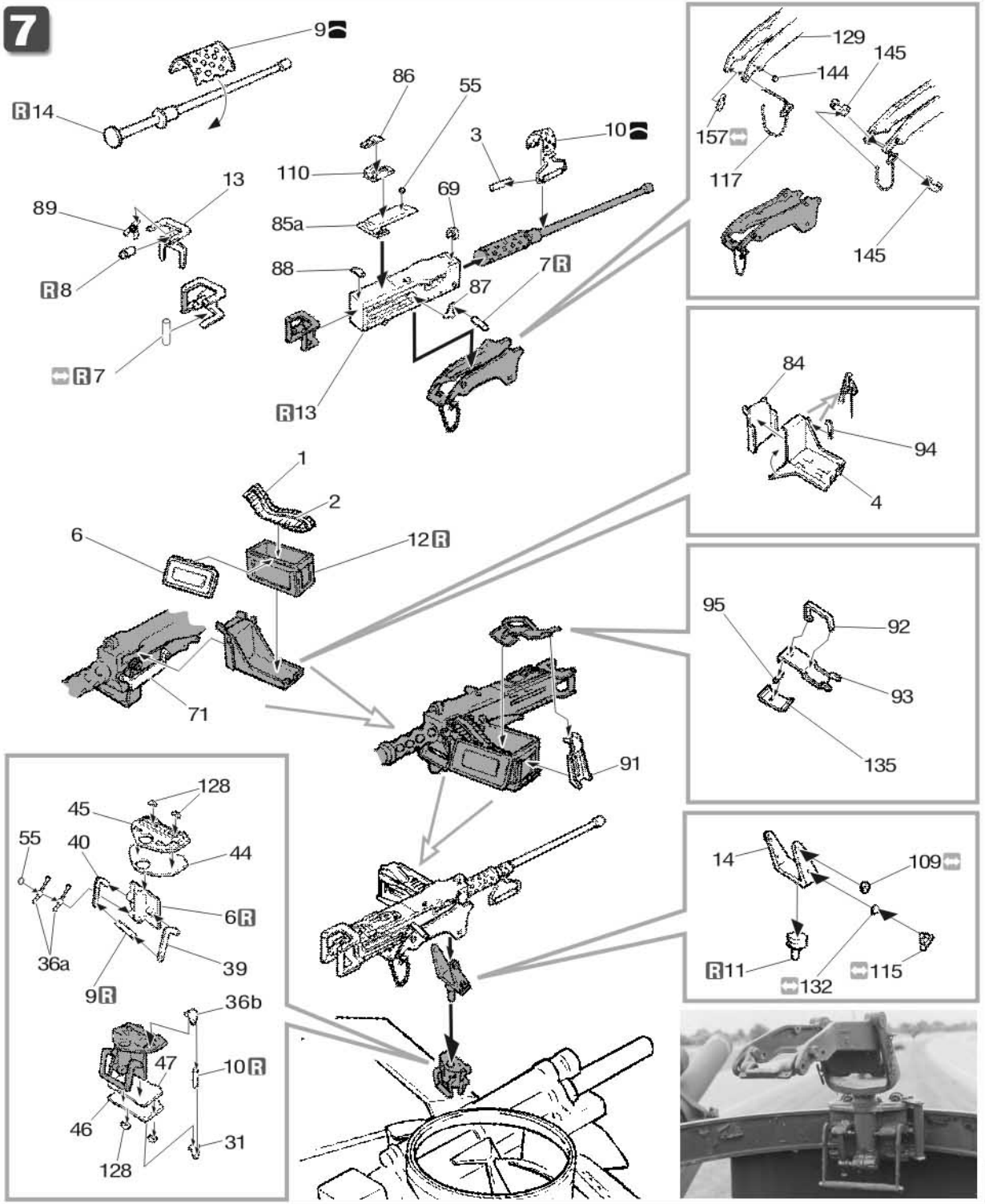

Item 420-M7 "Priest" (Part 2°)

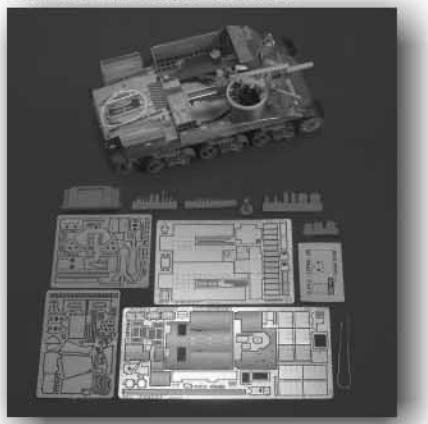

Item 421-M7 "Priest" (Part 2°)

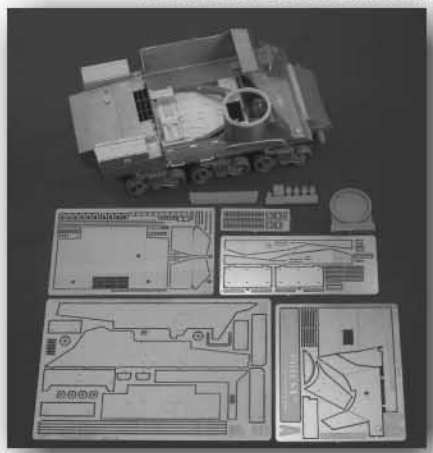

Item 424-105mm Ammo with cases



ROYAL MODEL - PO BOX 25 - 95039 TRECASTAGNI (CT) ITALY Tel. +39 95 780 0707-Fax +39 95 780 99 11
E-mail: info@royalmodel.com - Internet: www.royalmodel.com
©(2006) ROYAL MODEL