ROYAL MODEL
DIORAMA ACCESSORIES
Royal Model by Roberto Reale
P.O Box 25 - 95039 - Trecastagni (CT) ITALY Fax 0039-95-7809911

NO. 074

PANZERWERFER 42 auf MAULTIER 1/35

microdetails set

RESIN PARTS IDENTIFICATION

(Remove the shaded area shown)

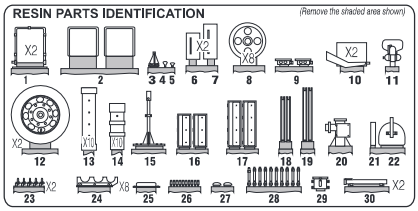

○ Remove the plastic part to be substitute with the photo-etched part.

● Repeat same operation for the other side.

The parts included in this kit are to be assembled in conjunction with the ITALERI kit.

For best results in the assembling of photo-etched and resin parts use cyanoacrylate glue.

Always remember to use cyanoacrylate glue in a well ventilated area.

Before assembly be sure to remove all parts to be substituted with photo-etched and resin parts.

It is advised before assembly to study well the instructions which accompany this MICRODETAILS SET plus any other sufficient documentation.

Note that some particulars illustrated in the instructions have been enlarged for easy identification.

If distortion occurs in some resin parts due to humidity immerge in hot water and reform.

Chassis details assembly.

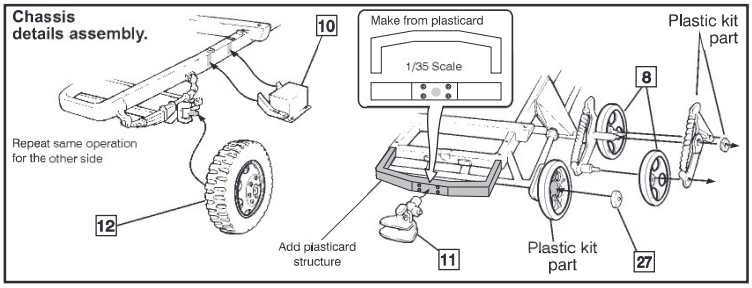

Interior hull details assembly.

To assemble all the parts each open area has to be closed with some plasticard, remaking them with the photo-etched template A 19.

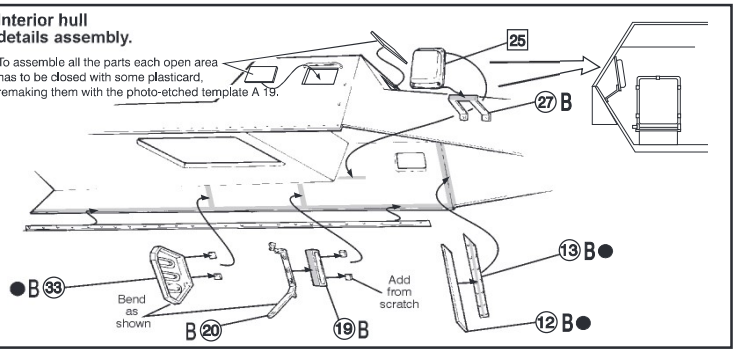

Interior hull details assembly.

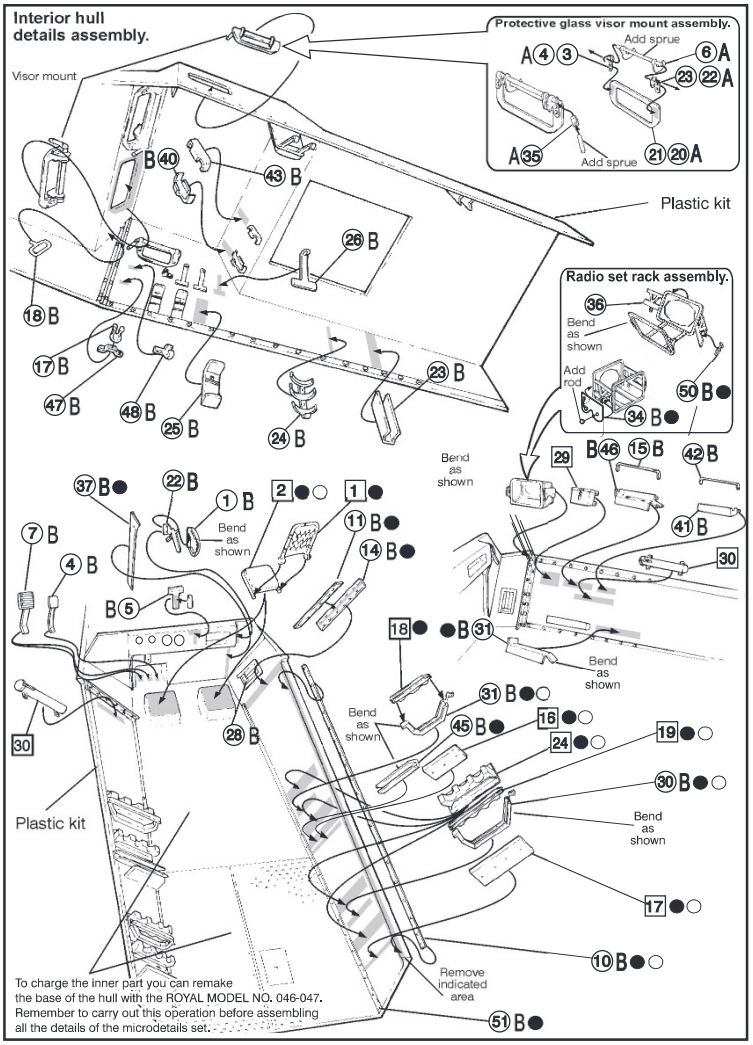

Hull details assembly.

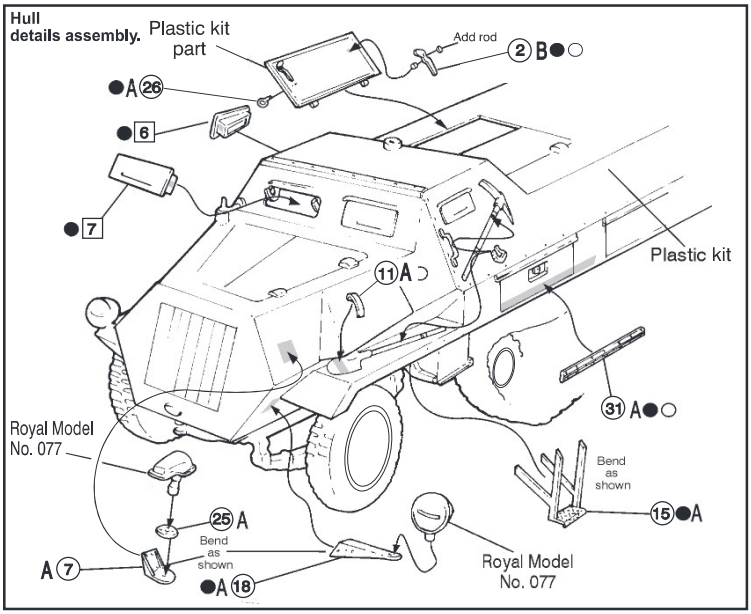

Rockets launcher barrels assembly.

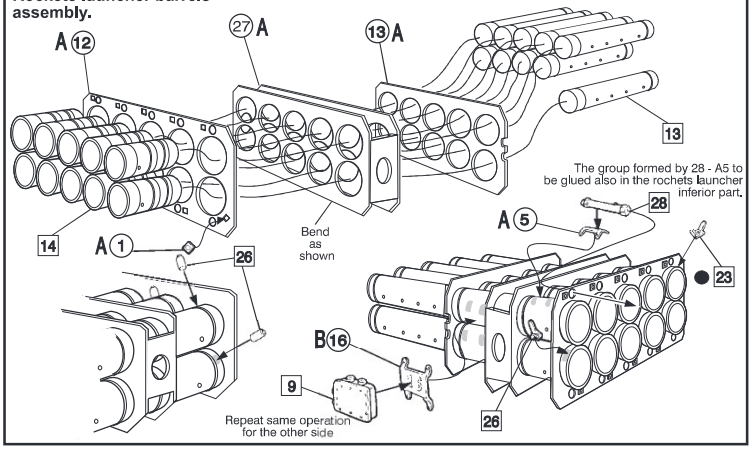

Interior details assembly.

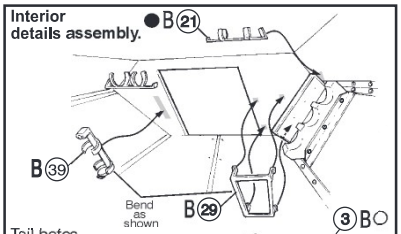

Tail hatcs details assembly.

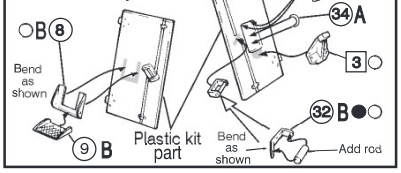

Rear hull details assembly.

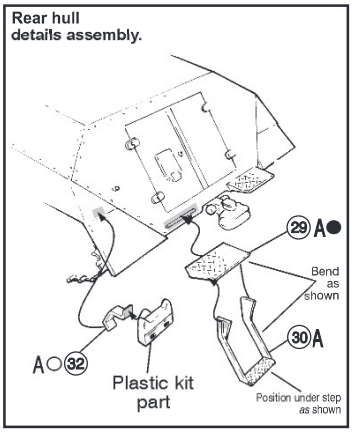

Rockets launcher details assembly.

In order to make a perfect use of the rockets launcher trunk of cables, you must make use of the kit copper wire, following carefully the scheme showed in the drawing.

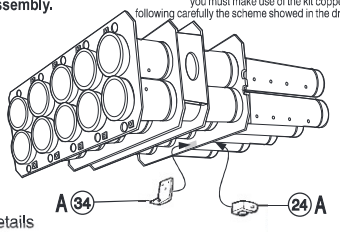

Turret details assembly.

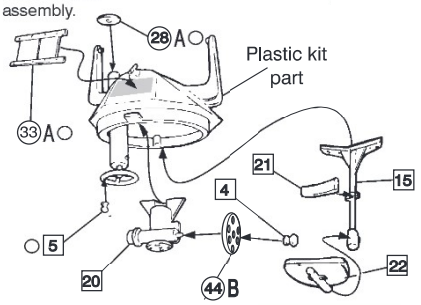

15 cm PANZERWERFER 42

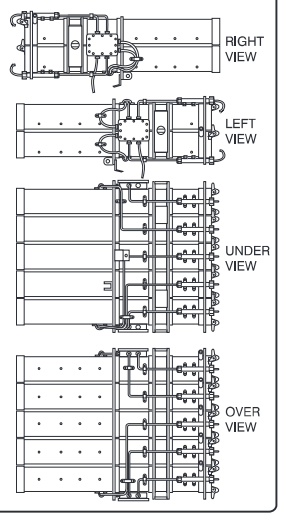

Drawings by **ROYAL MODEL** (1995)