ROYAL MODEL
DIORAMA ACCESSORIES

MICRODETAILS SET
1/72 Scale

CRUSADER MK.III

ITEM NO. 409

The parts included in this kit are to be assembled in conjunction with the Revell kit no. 03125 . For best results in the assembling of photo-etched use cyanoacrylate glue. Always remember to use cyanoacrylate glue in a well ventilated area. Before assembling be sure to remove all the parts to be substituted with photo-etched parts. It is advisable before assembling to study well the instructions which accompany this MICRODETAILS SET plus any other sufficient documentation. It is advise to heat the metal parts before glueing, once the metal is hot it will be easier to bend.

REPEAT SAME OPERATION FOR THE OTHER SIDE · PK PLASTIC KIT PART · W WIRE · ADD NUT · TO FOLD · TO BEND · FILE HOLE · REMOVE OR SUBSTITUTE THE PLASTIC KIT PART WITH ROYAL MODEL PART

1

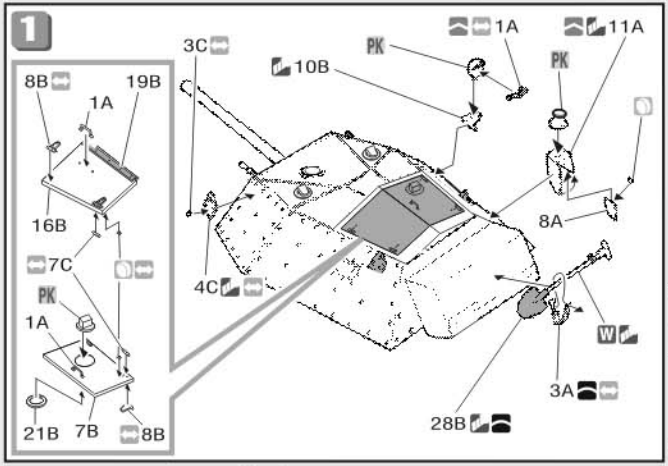

2

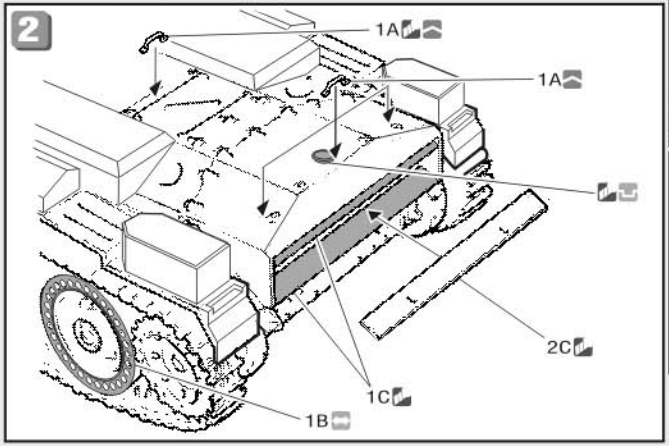

3

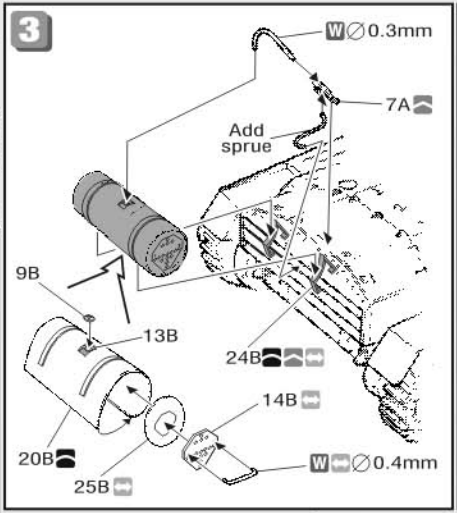

4

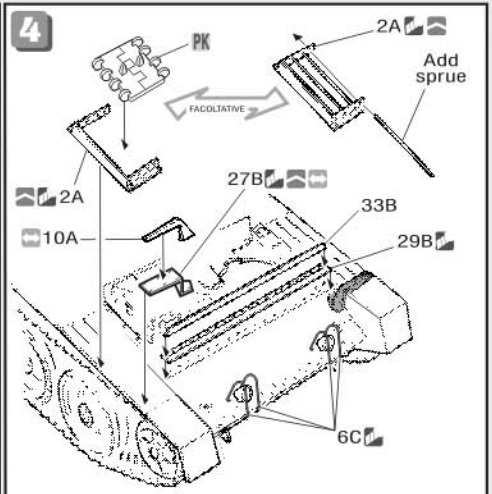

5 Wheels painting.

*Before painting the wheel frame colour the whole wheel black.

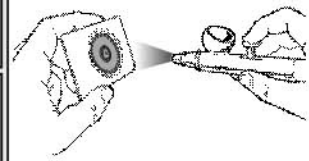

Hold template no. 22B,23B still in position with finger tips and spray whell frame with paint of desidered colour as shown above.

6

ROYAL MODEL BY REALE ROBERTO - PO BOX 25 - 95039 TREGASTAGNI (CT) ITALY
Tel. +39 95 789 0707-Fax +39 95 789 98 13
e-mail:info@royalmodel.com - internet:www.royalmodel.com
©(2005) ROYAL MODEL