ROYAL MODEL
DIORAMA ACCESSORIES

MICRODETAILS SET
1/72 Scale

ITEM NO. 407

T-34/85

The parts included in this kit are to be assembled in conjunction with the **Revell kit No. 03130**. For best results in the assembling of photo-etched use cyanoacrylate glue. Always remember to use cyanoacrylate glue in a well ventilated area. Before assembling be sure to remove all the parts to be substituted with photo-etched parts. It is advisable before assembling to study well the instructions which accompany this kit plus any other sufficient documentation. It is advise to heat the metal parts before glueing, once the metal is hot it will be easier to bend.

REMOVE OR SUBSTITUTE THE PLASTIC KIT PART WITH ROYAL MODEL PART | REPEAT SAME OPERATION FOR THE OTHER SIDE | PK PLASTIC KIT PART | ADD NUT | ADD ROD | TO BEND | MAKE 2 PIECES | FILE HOLE

1

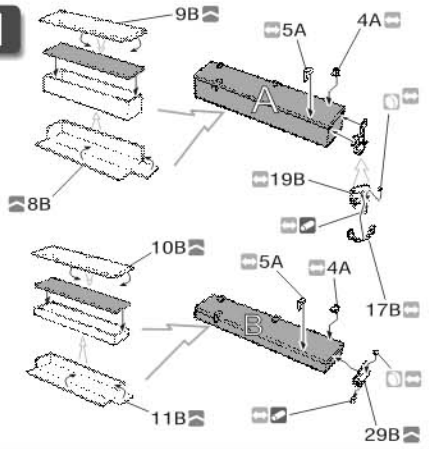

2

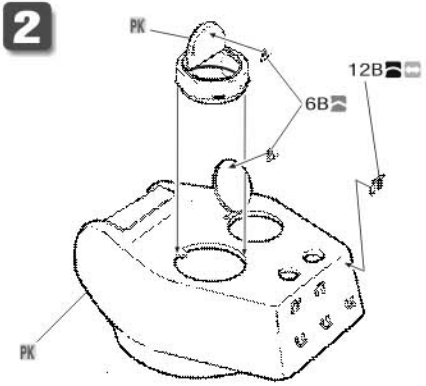

For to make the nuts of parts no. 2B,3B to press into the references points with a puch as shown below.



3

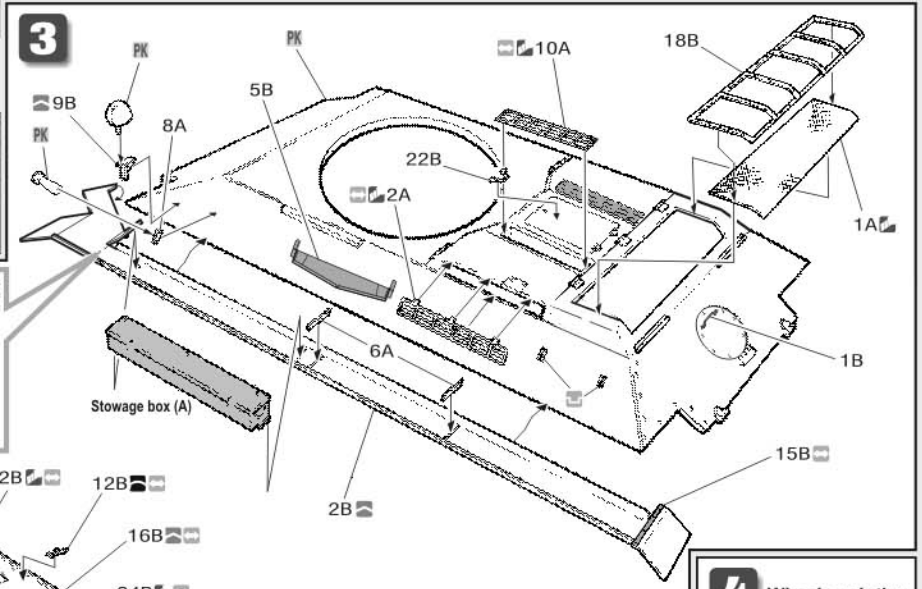

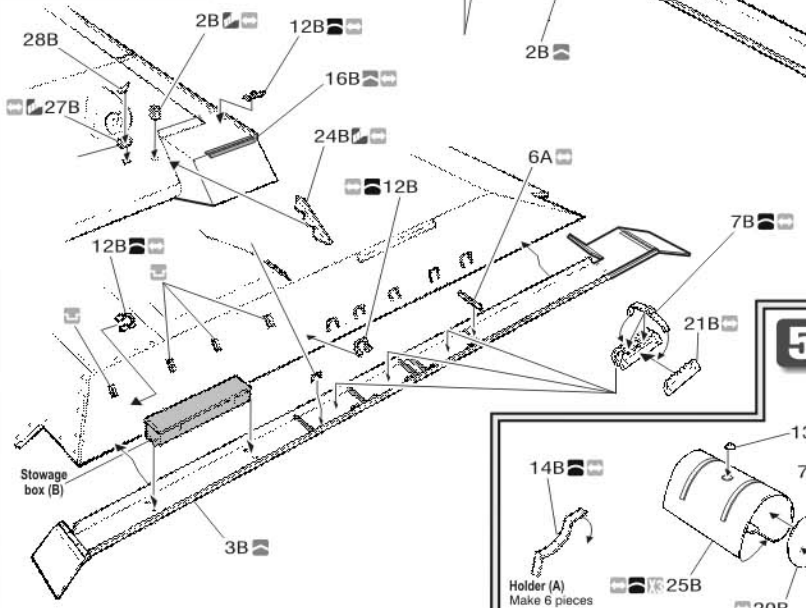

4 Wheels painting.

*Before painting the wheel frame colour the whole wheel black



Hold template no. 26B still in position with finger tips and spray wheel frame with paint of desidered colour as shown above.

5

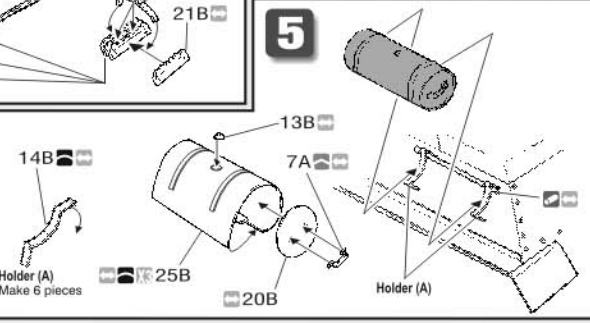

ROYAL MODEL BY REALE ROBERTO - PO BOX 28 - 95030 TRECASTAGNI (CT) ITALY Tel. +39 95 780 0757 - Fax +39 95 780 99 11
e-mail:info@royalmodel.com - Internet:www.royalmodel.com
©(2004) ROYAL MODEL