ROYAL MODEL
DIORAMA ACCESSORIES
Royal Model by Reale Roberto,
P.o: box - 95039 - Trecastagni (CT) ITALY

NO. 049

Sherman M4A2 1/35

conversion set

This set can be used to update both the Sherman M4A3 Tamiya kit.
For best results in the assembling of photo-etched and resin parts use cyanoacrylate glue.
Always remember to use cyanoacrylate glue in a well ventilated area.

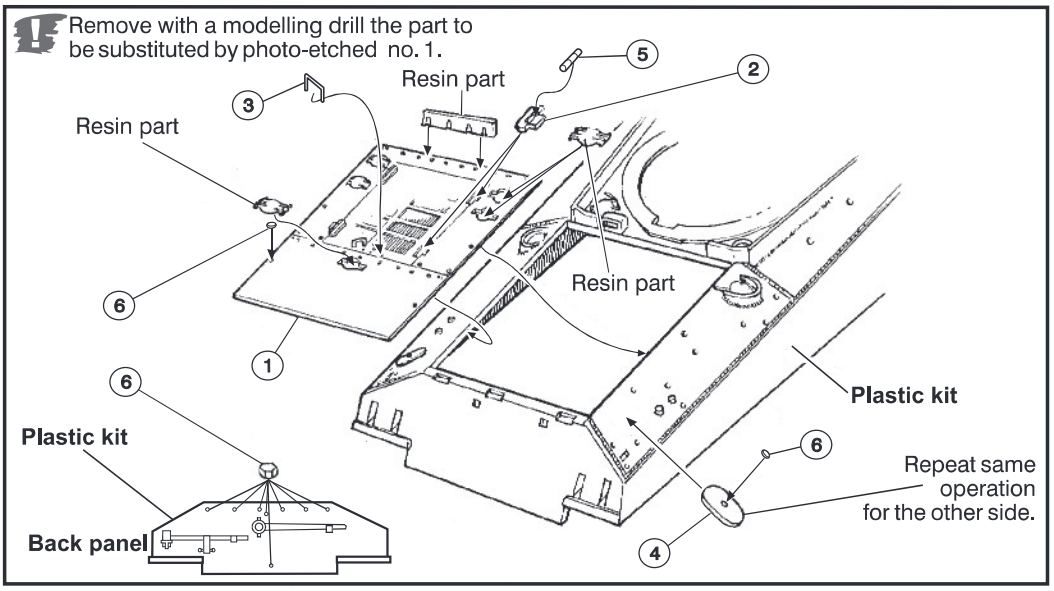
Remove with a modelling drill the part to be substituted by photo-etched no. 1.

Drawings by **ROYAL MODEL** (1995)