ROYAL MODEL
DIORAMA ACCESSORIES

MICRODETAILS SET
1/35 Scale

ITEM NO. 386

Sd.Kfz. 232 8 Rad (Part 1)

The parts included in this kit are to be assembled in conjunction with the Tamiya kit No. 35036. For best results in the assembling of photo-etched and resin parts use cyanoacrylate glue. Always remember to use cyanoacrylate glue in a well ventilated area. Before assembling be sure to remove all the parts to be substituted with photo-etched parts. It is advisable before assembling to study well the instructions which accompany this kit plus any other sufficient documentation. It is advise to heat the metal parts before glueing, once the metal is hot it will be easier to bend.

REMOVE OR SUBSTITUTE THE PLASTIC KIT PART WITH ROYAL MODEL PART
FILE HOLE
X2 MAKE 2 PIECES
ADD ROD
R RESIN PART
ADD PLASTICARD STRUCTURE
FACULTATIVE
REPEAT SAME OPERATION FOR THE OTHER SIDE
W WIRE
PK PLASTIC KIT PART
ADD NUT
TO FOLD
TO BEND
BE CAREFUL
WA (0,9 mm)
WB (0,6 mm)
WC (0,3 mm)

If ulterior details are required for your model it is possible to use added set ROYAL MODEL no. 390-391.

1

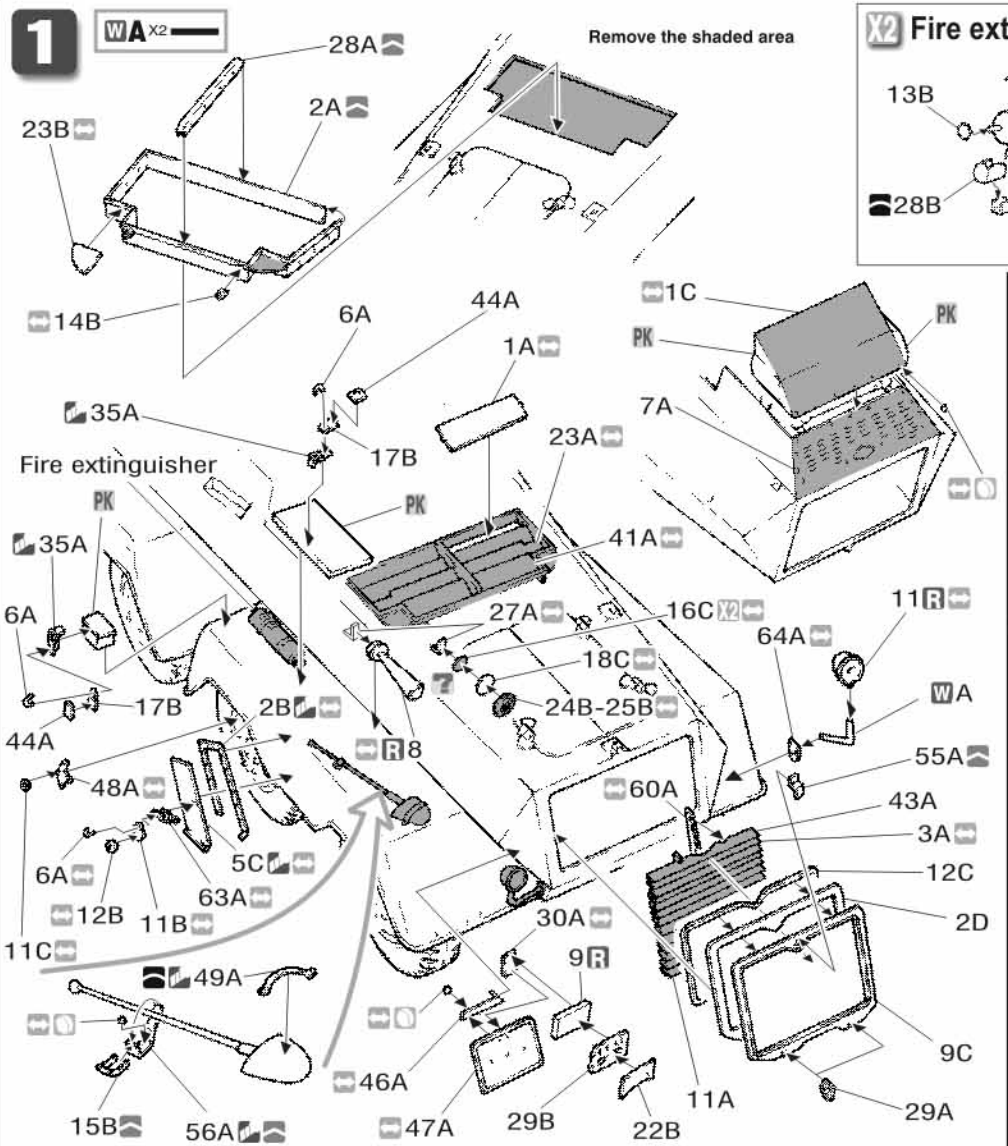

X2 Fire extinguisher.

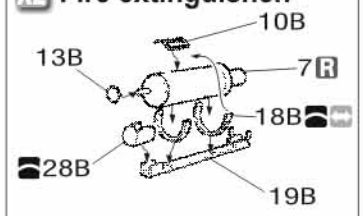

2

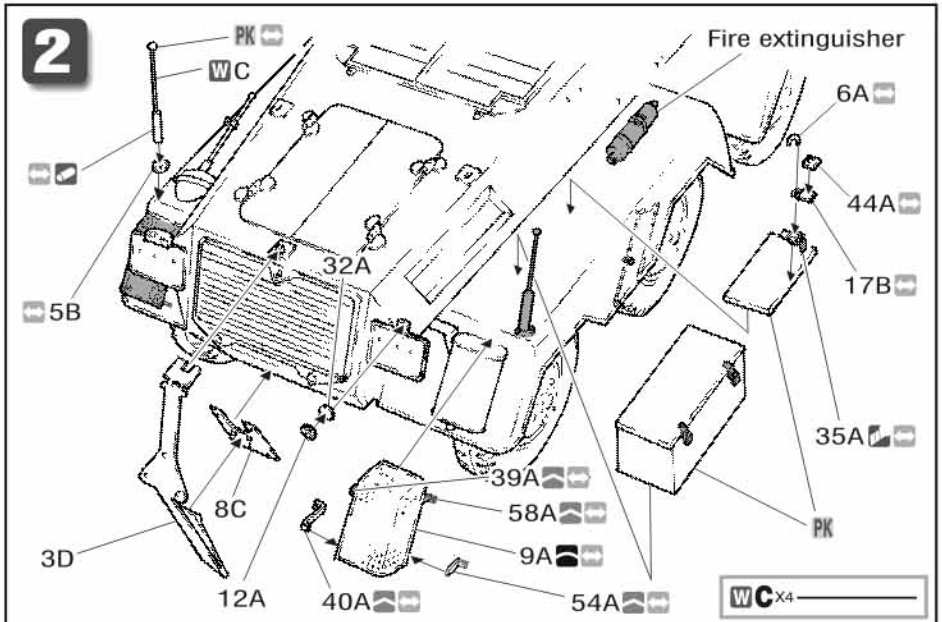

X4 Bracket.

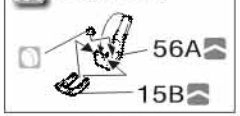

3

X2 JERRICAN BRACKET.

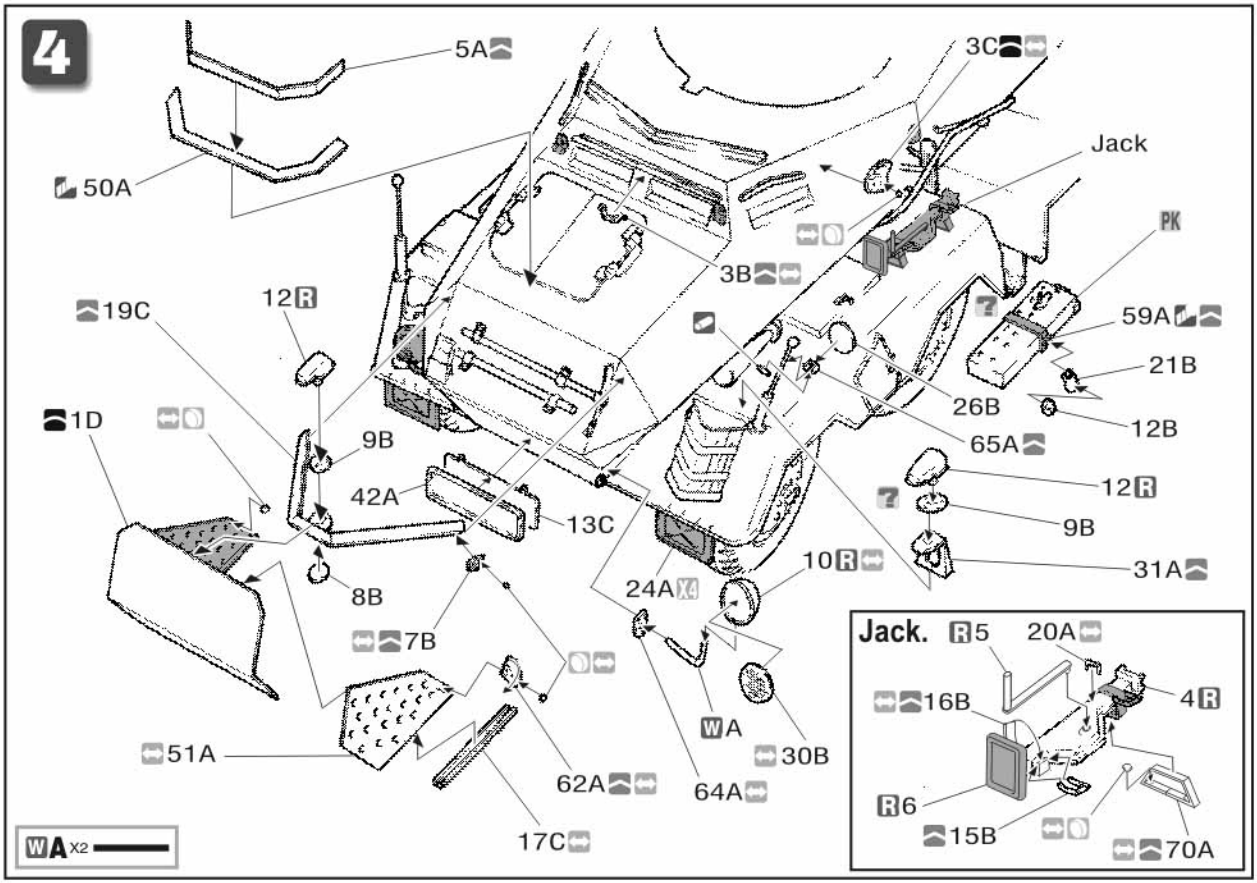

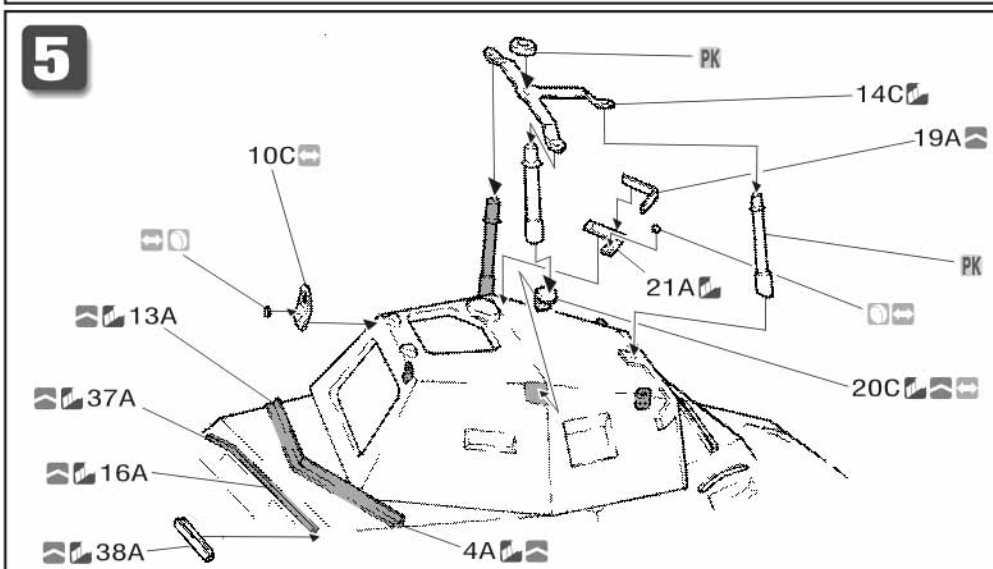

©(2004) ROYAL MODEL