ROYAL MODEL
DIORAMA ACCESSORIES
ITEM NO. 381

MICRODETAILS SET
1/35 Scale

3,7cm Pak

The parts included in this kit are to be assembled in conjunction with the Tamiya kit no. 35259 . For best results in the assembling of photo-etched and resin parts use cyanoacrylate glue. Always remember to use cyanoacrylate glue in a well ventilated area. Before assembling be sure to remove all the parts to be substituted with photo-etched parts. It is advisable before assembling to study well the instructions which accompany this MICRODETAILS SET plus any other sufficient documentation.It is advise to heat the metal parts before glueing, once the metal is hot it will be easier to bend.

REPEAT SAME OPERATION FOR THE OTHER SIDE · FILE HOLE · PK PLASTIC KIT PART · TO FOLD · R RESIN PART · REMOVE OR SUBSTITUTE THE PLASTIC KIT PART WITH ROYAL MODEL PART
TO BE HEATED · W WIRE · TO BEND · ADD NUT · ADD ROD

1

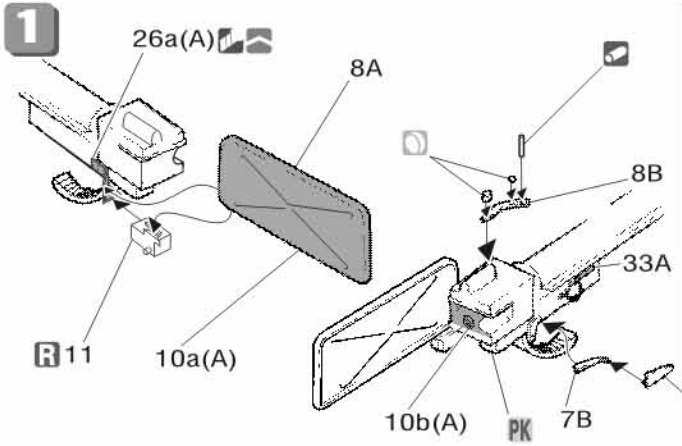

For to make the ribs of parts no. 10A to press into the references points with a puch as shown below.

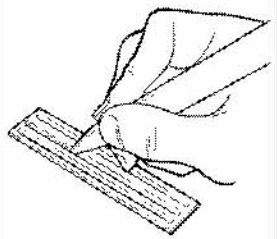

2

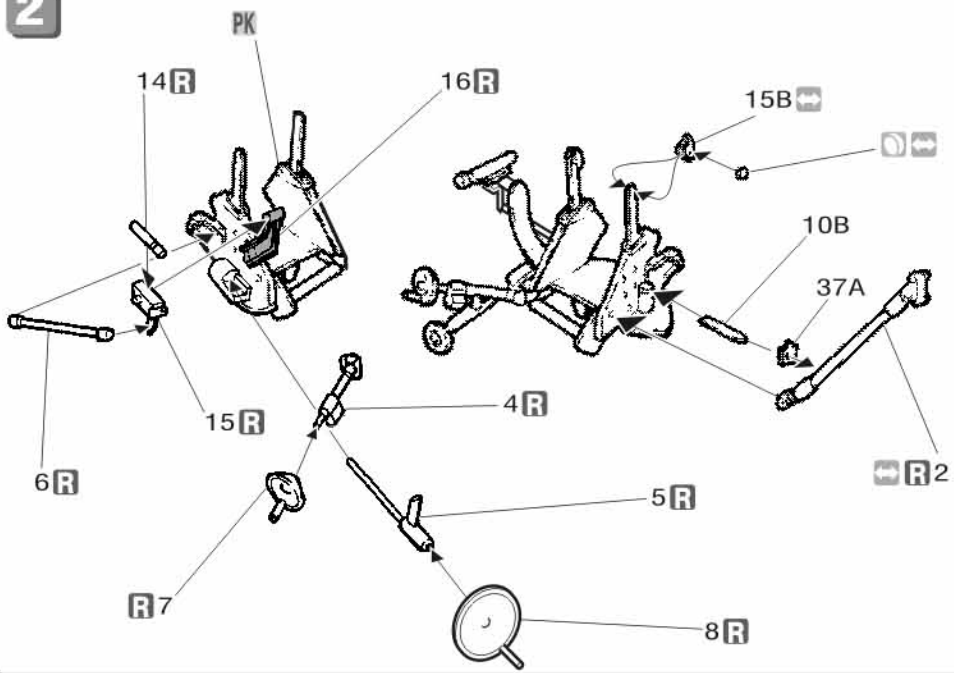

3

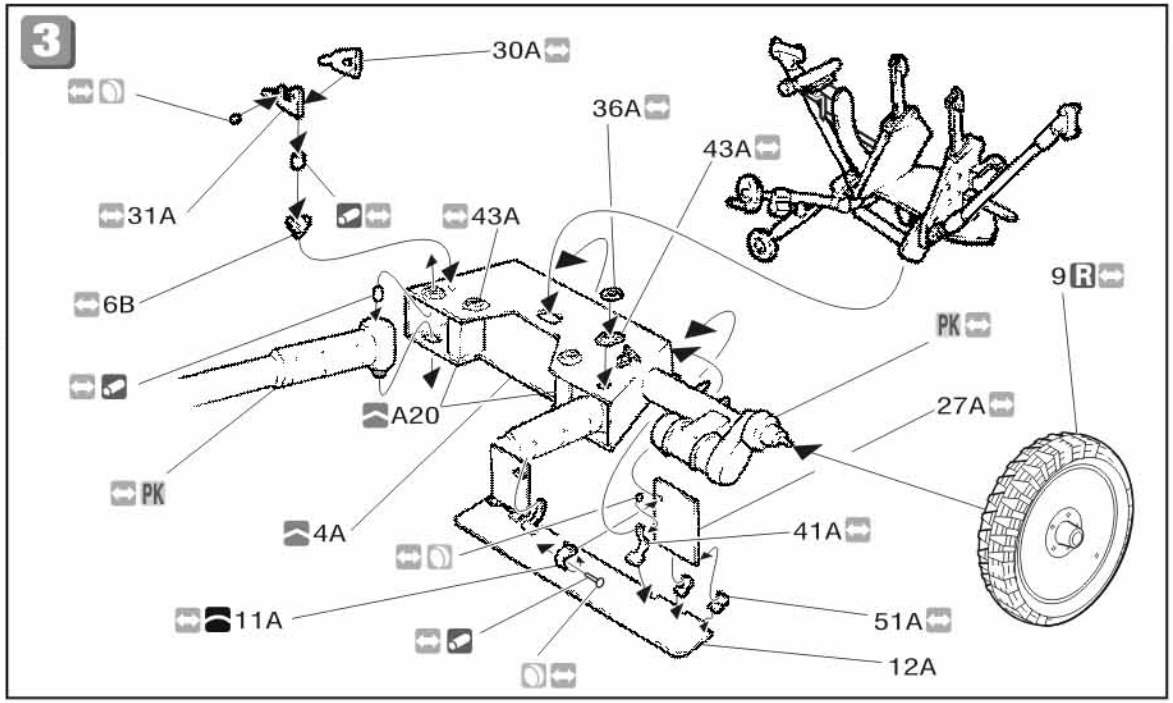

4

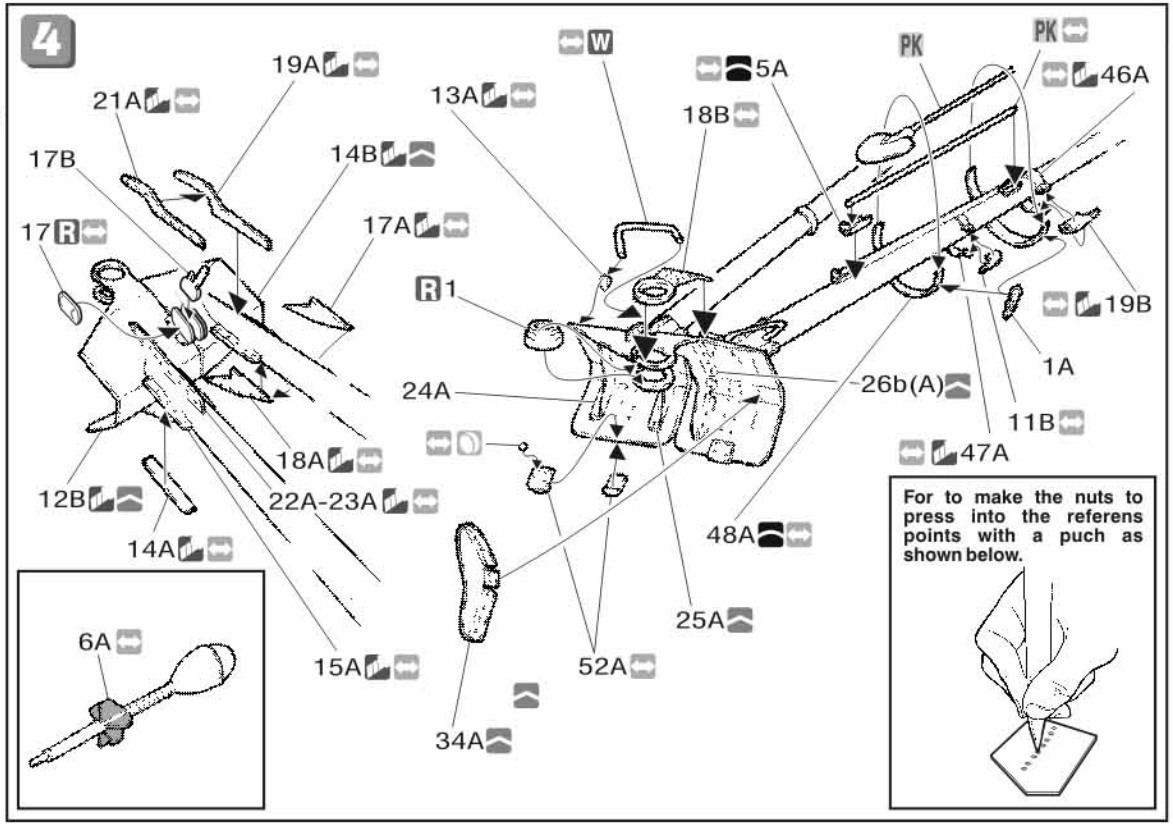

For to make the nuts to press into the referens points with a puch as shown below.

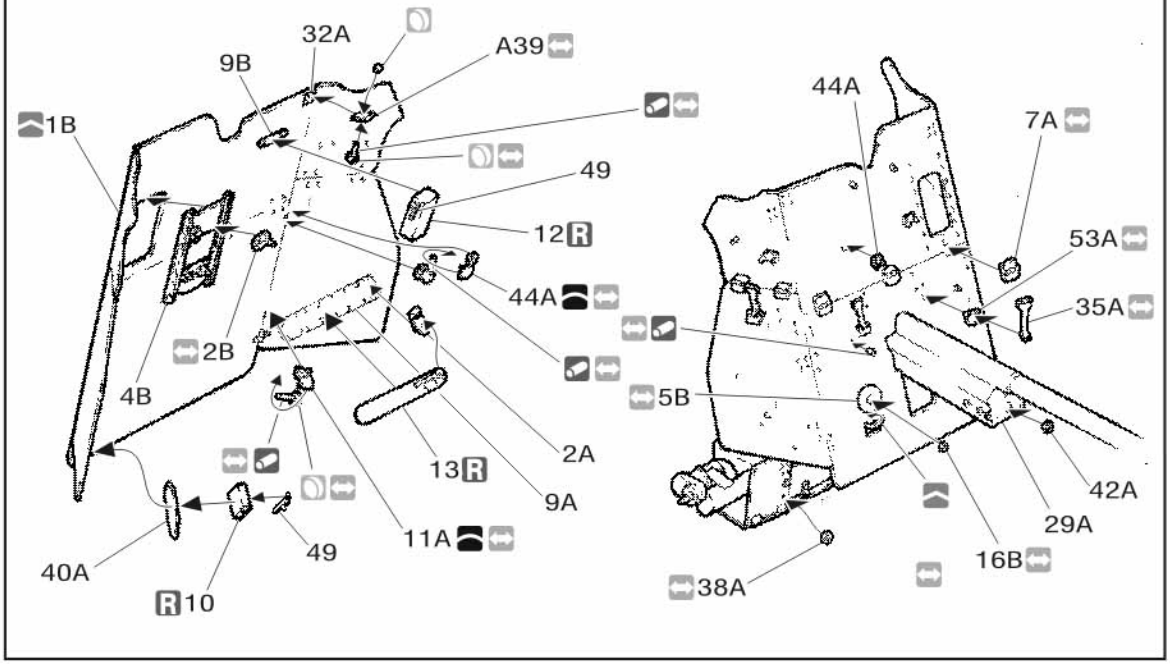

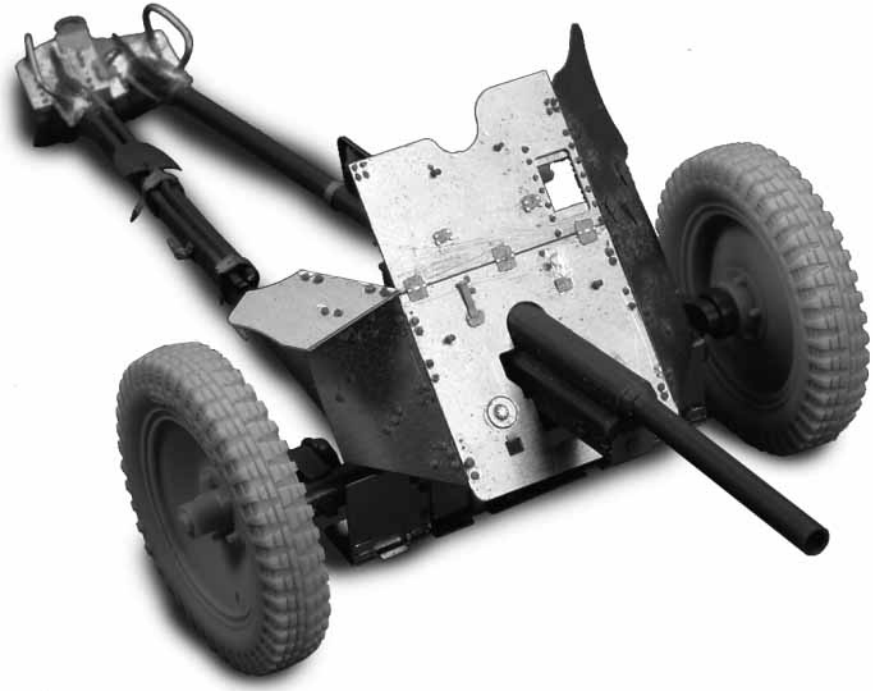

ROYAL MODEL BY REALE ROBERTO - PO BOX 25 - 95030 TRECASTAGNI (CT) ITALY
Tel. +39 95 780 0707-Fax +39 95 780 99 11
e-mail:info@royalmodel.com - Internet:www.royalmodel.com
©(2006) ROYAL MODEL