ROYAL MODEL
DIORAMA ACCESSORIES

MICRODETAILS SET
1/35 Scale

# KRUPP PROTZE

**ITEM NO. 380**

The parts included in this kit are to be assembled in conjunction with the Tamiya kit no. 35259 . For best results in the assembling of photo-etched and resin parts use cyanoacrylate glue. Always remember to use cyanoacrylate glue in a well ventilated area. Before assembling be sure to remove all the parts to be substituted with photo-etched parts. It is advisable before assembling to study well the instructions which accompany this MICRODETAILS SET plus any other sufficient documentation. It is advise to heat the metal parts before glueing, once the metal is hot it will be easier to bend.

REPEAT SAME OPERATION FOR THE OTHER SIDE · PK PLASTIC KIT PART · ADD PLASTICARD STRUCTURE · ADD NUT · ADD ROD · R RESIN PART
REMOVE OR SUBSTITUTE THE PLASTIC KIT PART WITH ROYAL MODEL PART · W WIRE · TO FOLD · TO BEND · FACULTATIVE

**If ulterior details are required for your model it is possible to use added set ROYAL MODEL no. 389.**

## Bracket A

X4

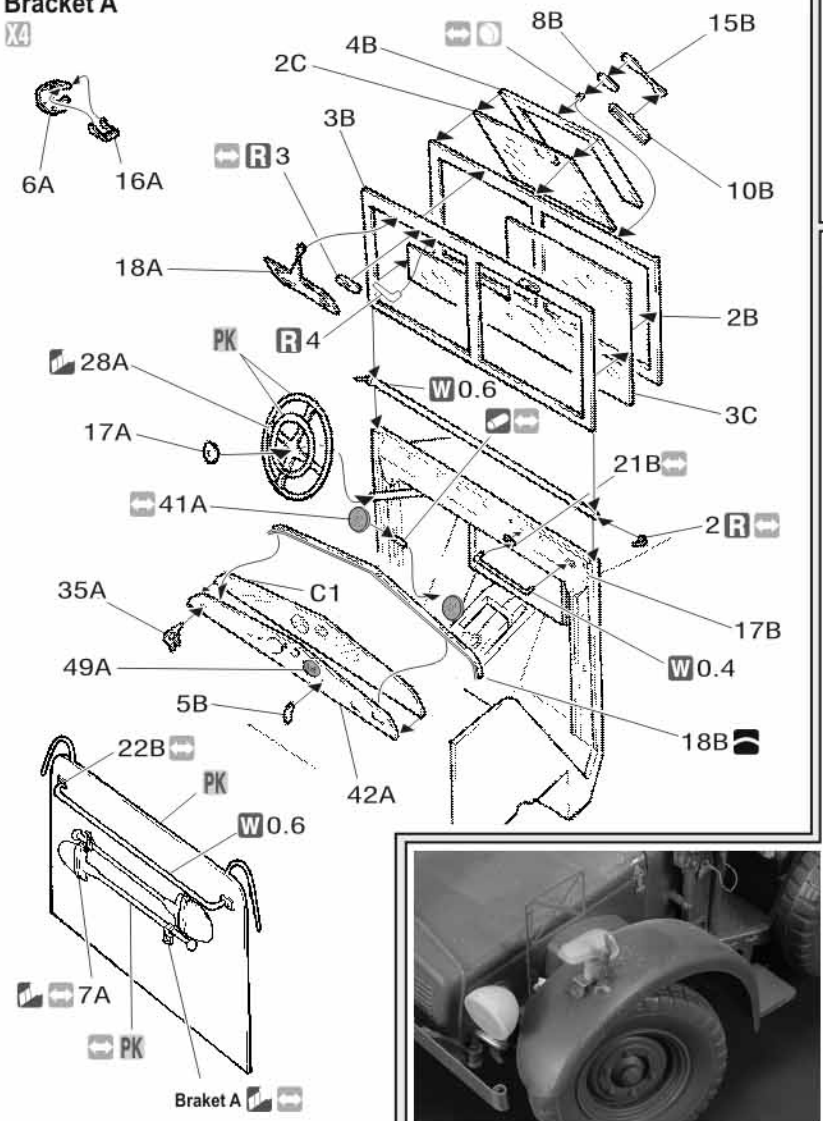




## 2

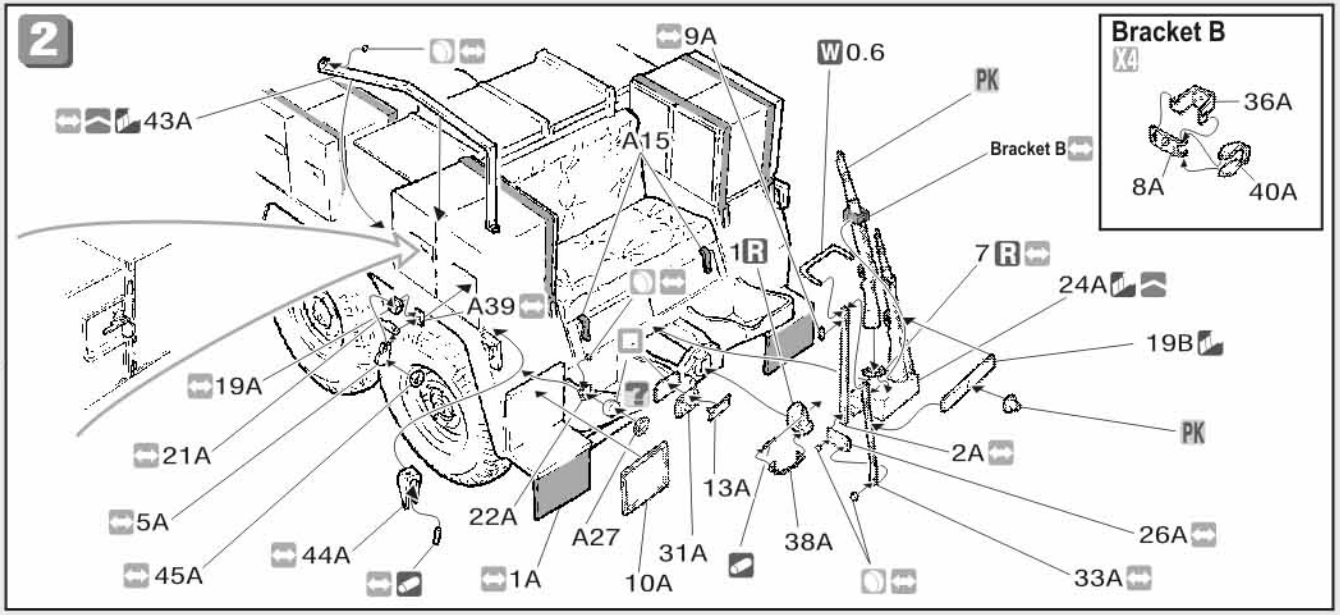


## Bracket B

X4




## 3

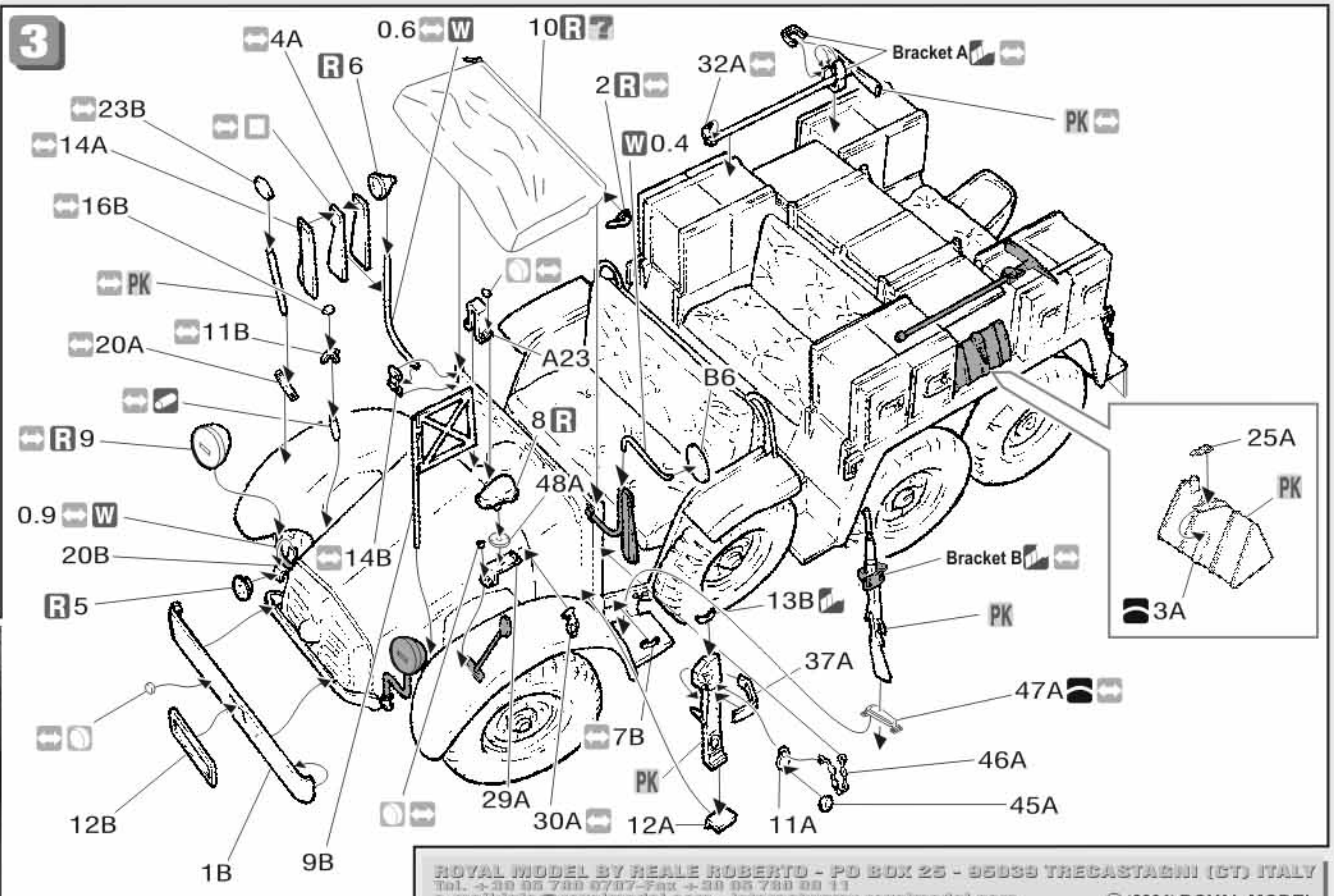


ROYAL MODEL BY REALE ROBERTO - PO BOX 25 - 95039 TREGASTAGNI (CT) ITALY
Tel. +39 95 780 0707-Fax +39 95 780 88 11
e-mail:info@royalmodel.com - internet:www.royalmodel.com
©(2004) ROYAL MODEL