ROYAL MODEL
DIORAMA ACCESSORIES

MICRODETAILS SET
1/35 Scale

ITEM NO. 370

Sd. Kfz. 251 C (Part 1)

The parts included in this kit are to be assembled in conjunction with the Dragon kit. For best results in the assembling of photo-etched and resin parts use cyanoacrylate glue. Always remember to use cyanoacrylate glue in a well ventilated area. Before assembling be sure to remove all the parts to be substituted with photo-etched parts. It is advisable before assembling to study well the instructions which accompany this kit plus any other sufficient documentation. It is advise to heat the metal parts before glueing, once the metal is hot it will be easier to bend.

X2 MAKE 2 PIECES | REMOVE OR SUBSTITUTE THE PLASTIC KIT PART WITH ROYAL MODEL PART | BE CAREFUL | THIS PART SUBSTITUTE THE PLASTIC KIT PART N... | TO BE HEATED | FACULTATIVE

PK PLASTIC KIT PART | REPEAT SAME OPERATION FOR THE OTHER SIDE | TO FOLD | TO BEND | ADD NUT | ADD ROD

WA (0,4 mm)
WB (0,6 mm)

If ulterior details are required for your model it is possible to use added set ROYAL MODEL no. 371-372-373-383.

1

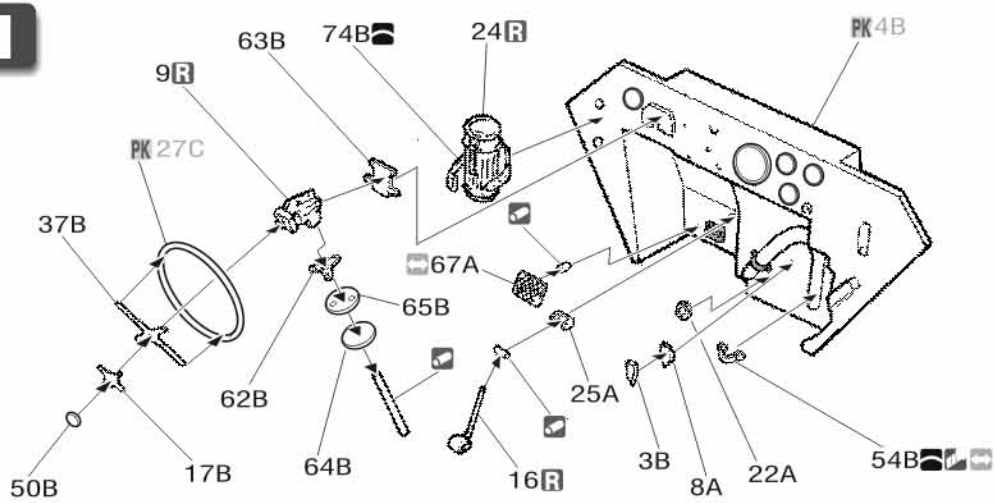

2

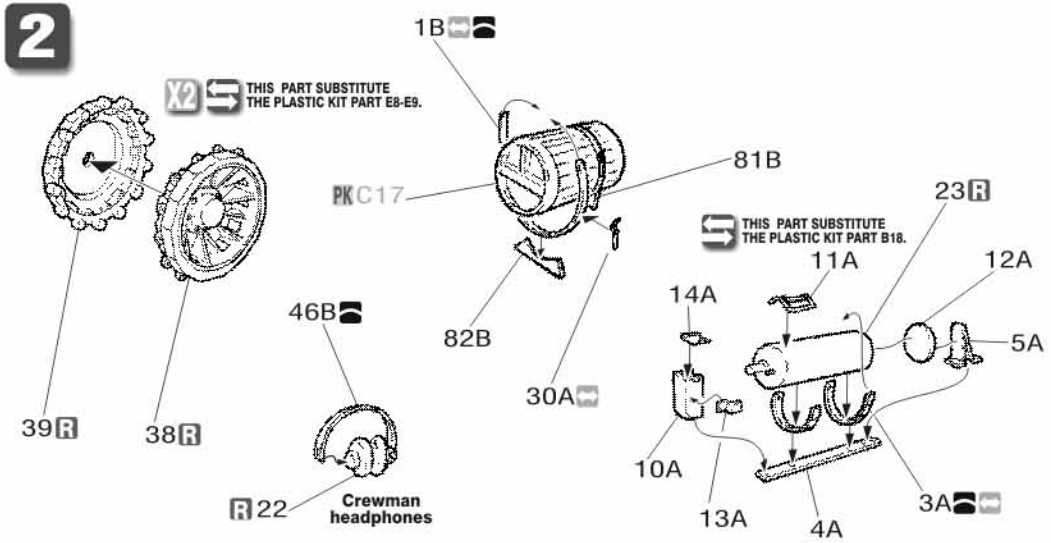

3

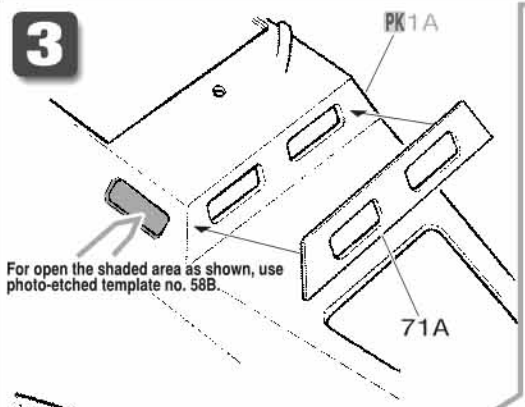

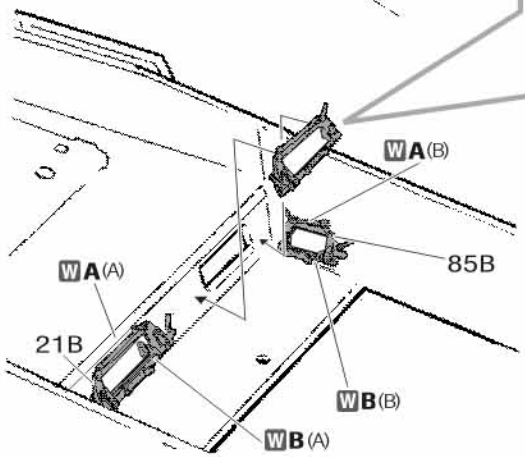

X2 To make two front and two lateral visors as shown.

WB
(A) X2
(B) X2

WA
(A) X2
(B) X2

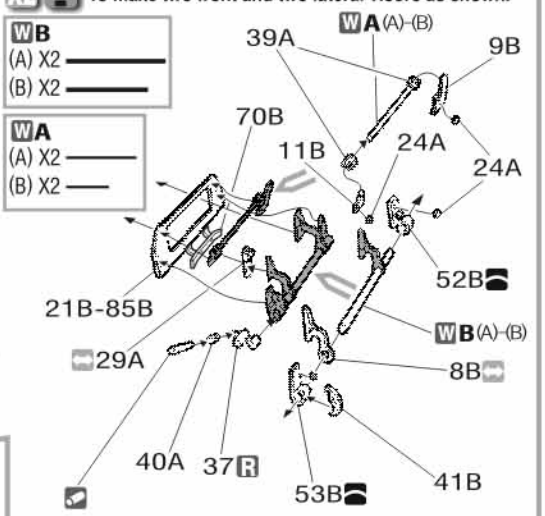

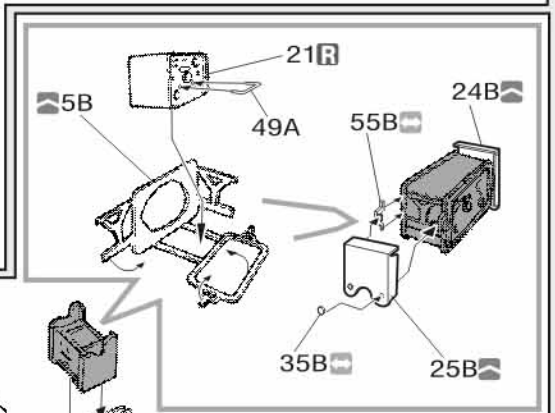

4

X2

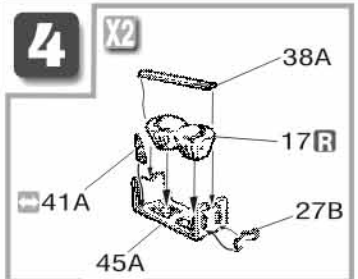

X2

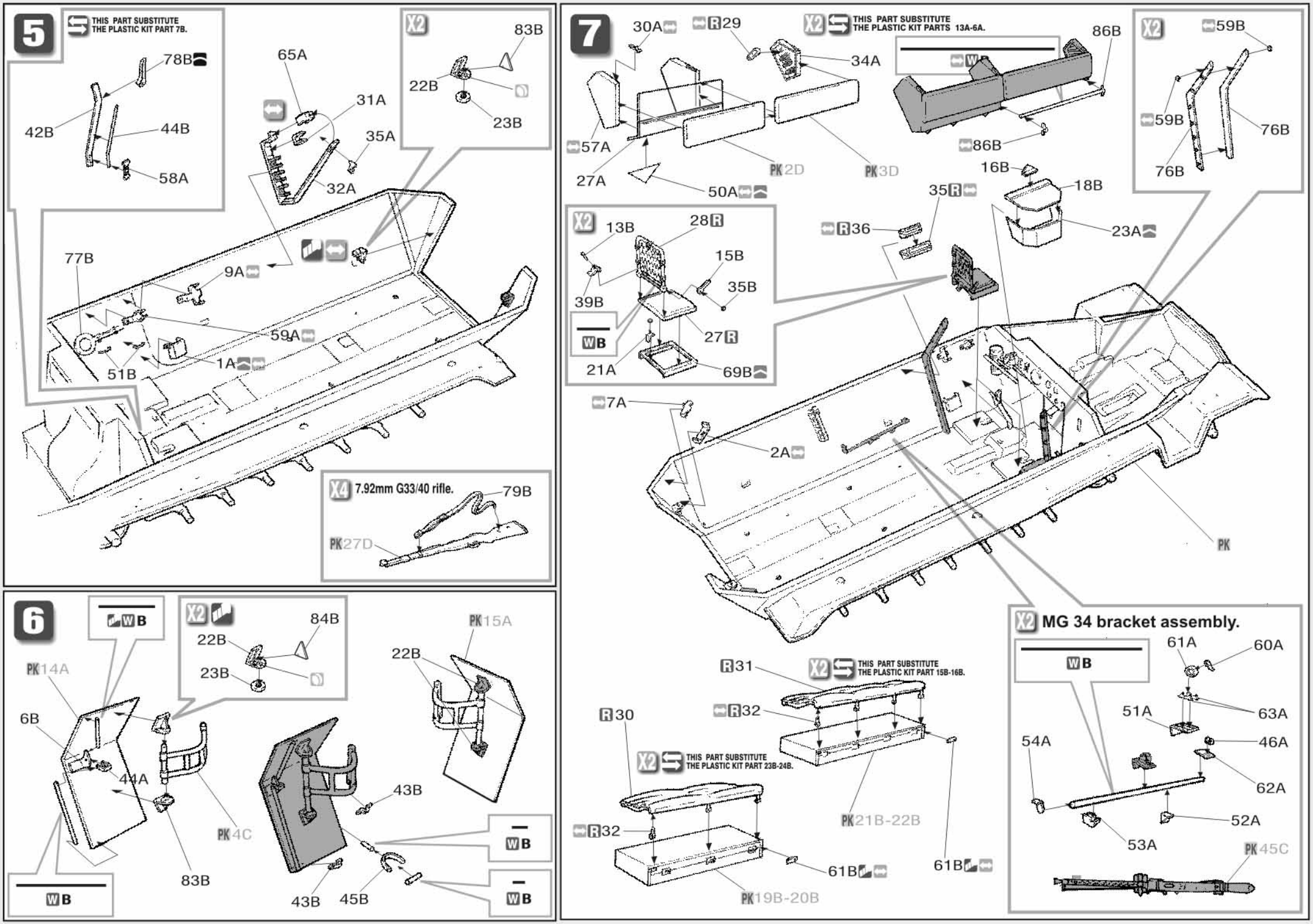
5
THIS PART SUBSTITUTE THE PLASTIC KIT PART 7B.
78B
42B
44B
58A
65A
31A
35A
32A
X2
83B
22B
23B
77B
9A
59A
51B
1A
X4 7.92mm G33/40 rifle.
79B
PK27D
6
WB
X2
84B
22B
23B
PK14A
6B
44A
PK4C
83B
WB
PK15A
22B
43B
43B
45B
WB
WB
7
30A
R29
X2 THIS PART SUBSTITUTE THE PLASTIC KIT PARTS 13A-6A.
34A
86B
W
57A
27A
50A
PK2D
PK3D
86B
X2
59B
59B
76B
76B
16B
18B
23A
35R
R36
X2
13B
28R
15B
35B
39B
WB
27R
21A
69B
7A
2A
PK
R31
X2 THIS PART SUBSTITUTE THE PLASTIC KIT PART 15B-16B.
R32
R30
X2 THIS PART SUBSTITUTE THE PLASTIC KIT PART 23B-24B.
R32
PK21B-22B
61B
61B
PK19B-20B
X2 MG 34 bracket assembly.
WB
61A
60A
63A
51A
46A
54A
62A
52A
53A
PK45C

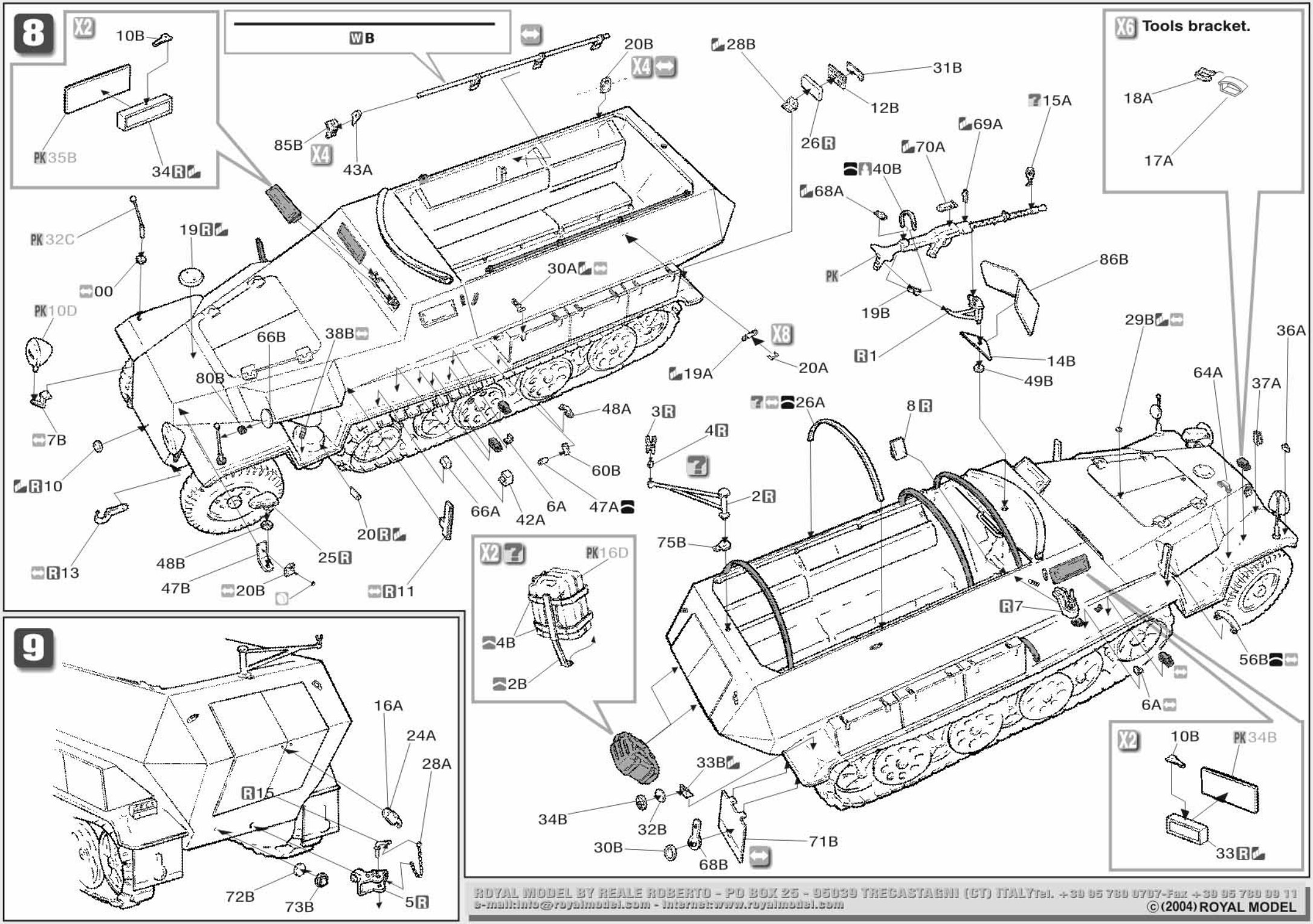

ROYAL MODEL BY REALE ROBERTO - PO BOX 25 - 95039 TRECASTAGNI (CT) ITALY Tel. +39 95 780 0707-Fax +39 95 780 99 11
e-mail:info@royalmodel.com - Internet:www.royalmodel.com
©(2004) ROYAL MODEL