ROYAL MODEL
DIORAMA ACCESSORIES
Royal Model by Reale Roberto
P.O. Box 25 - 95039 - Trecastagni (CT) ITALY

MICRODETAILS SET
No. 356
1/35 Scale

60cm Mörser "Karl" (Part 1')

The parts included in this kit are to be assembled in conjunction with the Dragon kit no. 6179. For best results in the assembling of photo-etched and resin parts use cyanoacrylate glue. Always remember to use cyanoacrylate glue in a well ventilated area. Before assembling be sure to remove all the parts to be substituted with photo-etched and resin parts. It is advisable before assembling to study well the instructions which accompany this MICRODETAILS SET plus any other sufficient documentation.

○ Substitute the plastic part with the photo-etched or resin part ● Repeat the same operation for the other side [R] Resin part ✹ To be heated ◆ Facultative

C (Make 6 pieces)

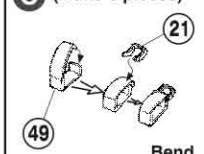

2 Turret details.

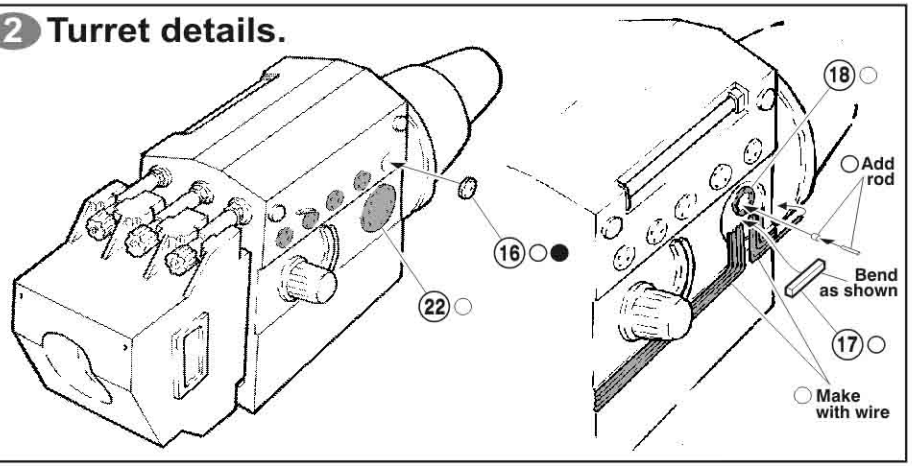

1 Details assembly

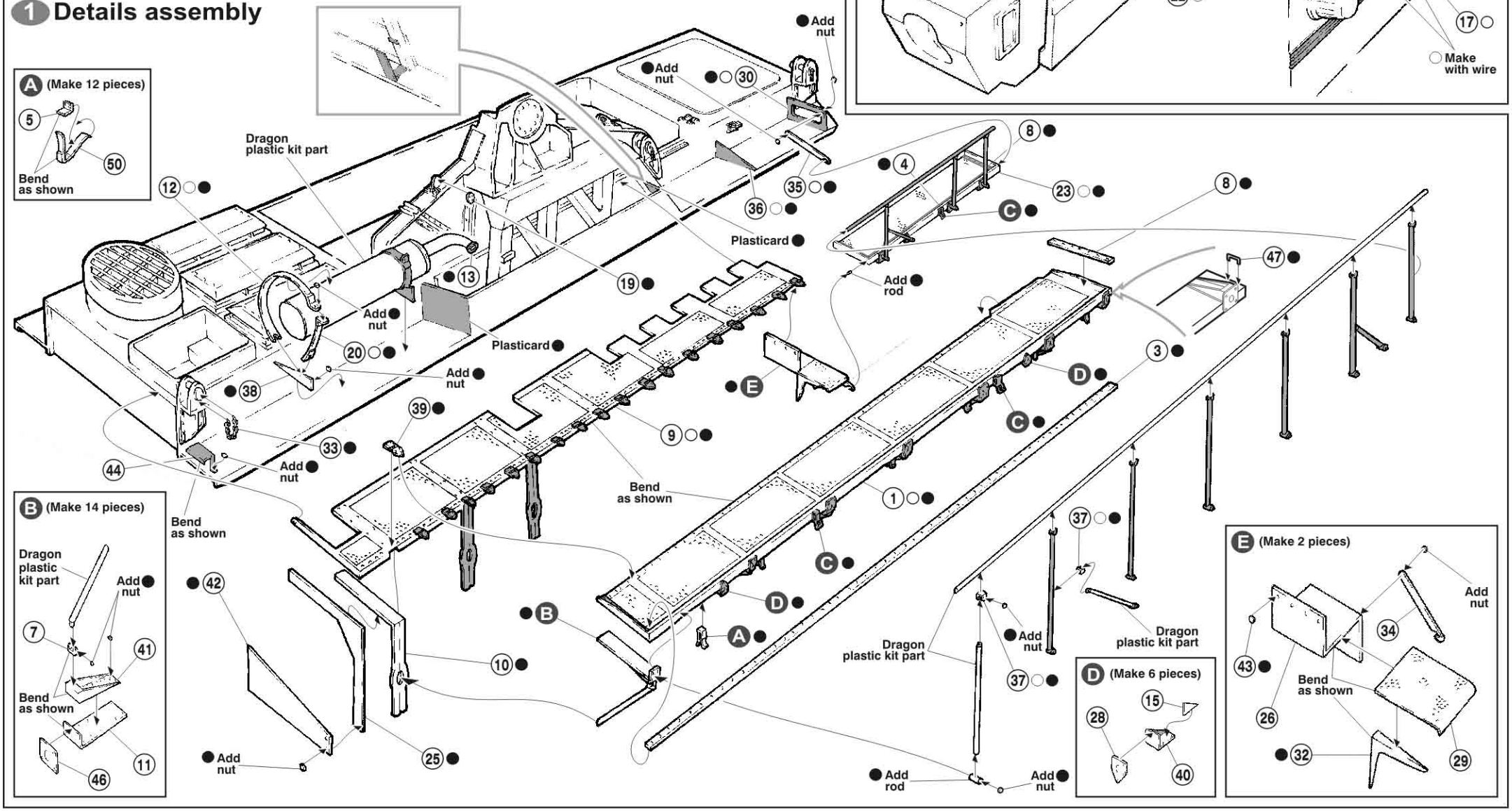

A (Make 12 pieces)

B (Make 14 pieces)

D (Make 6 pieces)

E (Make 2 pieces)

© (2004) ROYAL MODEL