ROYAL MODEL MORAL ACCESSORIES

MICRODETAILS SET
1/35 Scale

U.S. Tank Destroyer M-10

ITEM NO. 350

The parts included in this kit are to be assembled in conjunction with the **Academy** kit . For best results in the assembling of photo-etched and resin parts use cyanoacrylate glue. Always remember to use cyanoacrylate glue in a well ventilated area. Before assembling be sure to remove all the parts to be substituted with photo-etched parts. It is advisable before assembling to study well the instructions which accompany this MICRODETAILS SET plus any other sufficient documentation. It is advise to heat the metal parts before glueing, once the metal is hot it will be easier to bend.

If ulterior details are required for your model it is possible to use added set ROYAL MODEL no. 362.

(PK) REPEAT SAME OPERATION FOR THE OTHER SIDE — PK PLASTIC KIT PART — TO FOLD — TO BEND — ADD NUT — OPTIONAL — ADD PLASTICARD STRUCTURE — TO BE HEATED — MAKE 2 PIECES — REMOVE OR SUBSTITUTE THE PLASTIC KIT PART WITH ROYAL MODEL PART — R RESIN PART — ADD ROD

1 Hull details assembly.

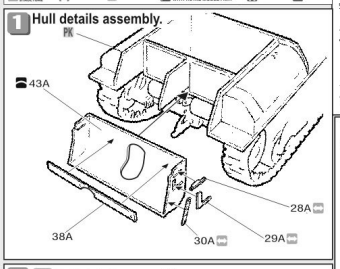

2 Hull details assembly.

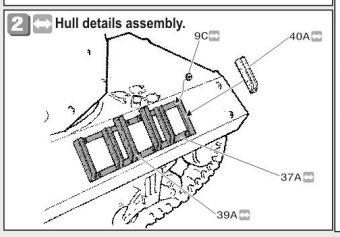

3 Turret details assembly.

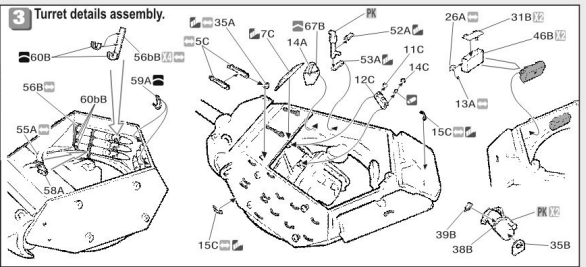

4 Hull details assembly.

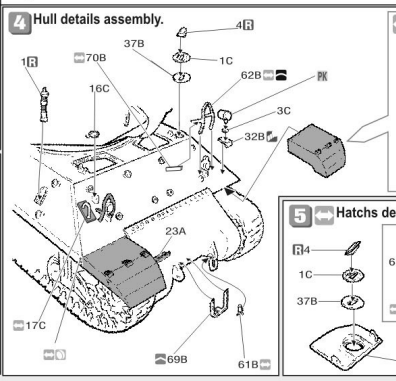

Fenders assembly.

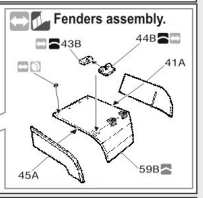

5 Hatchs details assembly.

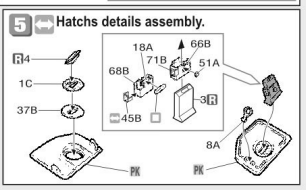

6 .30 Cal Machine Gun details assembly.

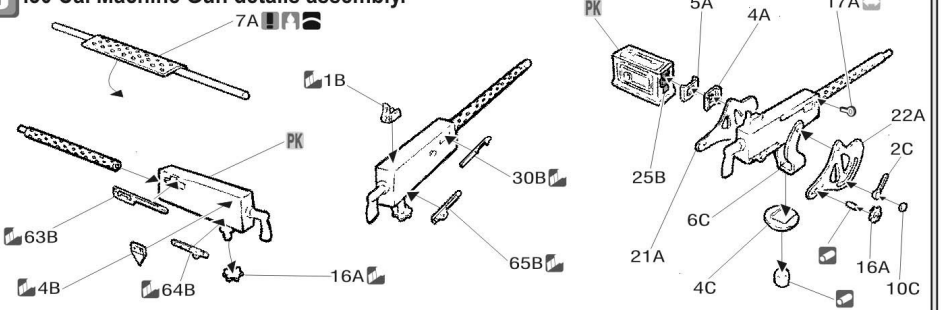

7 Hull details assembly.

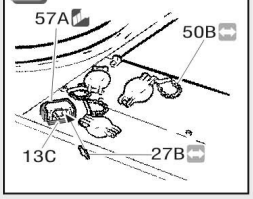

8 Hull details assembly.

9 .50 Cal Machine Gun details assembly.

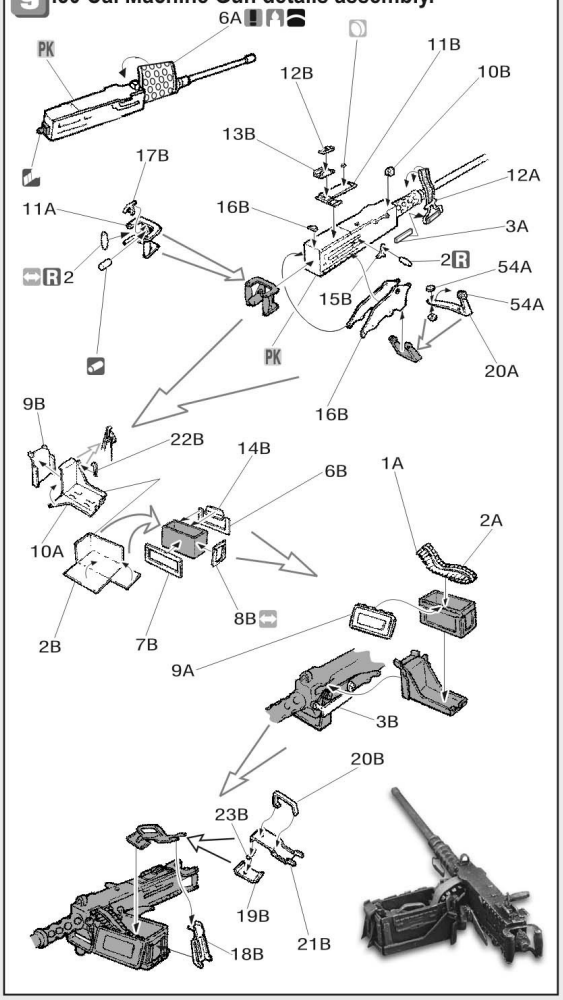

ROYAL MODEL BY REALE ROBERTO - PO BOX 25 - 95039 TRECASTAGNI (CT) ITALY
Tel. +39 95 780 0787-Fax +39 95 780 98 11
e-mail:info@royalmodel.com - Internet:www.royalmodel.com
©(2004) ROYAL MODEL