ROYAL MODEL
DIORAMA ACCESSORIES

MICRODETAILS SET
1/35 Scale

Sd. Kfz. 234/1

ITEM NO. 343

The parts included in this kit are to be assembled in conjunction with the **Italeri** kit No.294 . For best results in the assembling of photo-etched and resin parts use cyanoacrylate glue. Always remember to use cyanoacrylate glue in a well ventilated area. Before assembling be sure to remove all the parts to be substituted with photo-etched and resin parts. It is advisable before assembling to study well the instructions which accompany this MICRODETAILS SET plus any other sufficient documentation. It is advise to heat the metal parts before glueing, once the metal is hot it will be easier to bend.

BE CAREFUL · SUBSTITUTE THE PLASTIC PART WITH ROYAL MODEL PART · REPEAT SAME OPERATION FOR THE OTHER SIDE · TO BE HEATED · W WIRE · ? OPTIONAL · TO PUTTY · FILE HOLE · X2 MAKE 2 PIECES · PK PLASTIC KIT PART · ADD ROD · ADD NUT · R RESIN PART · TO FOLD · ADD PLASTICARD STRUCTURE · TO BEND

1

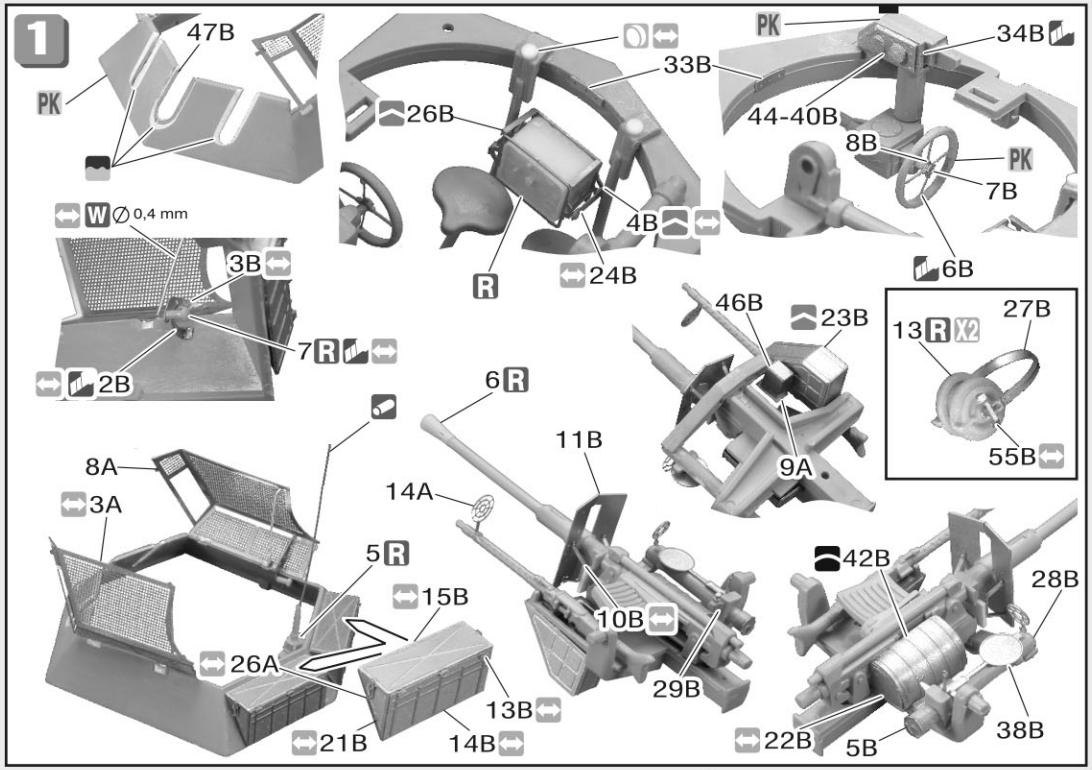

2

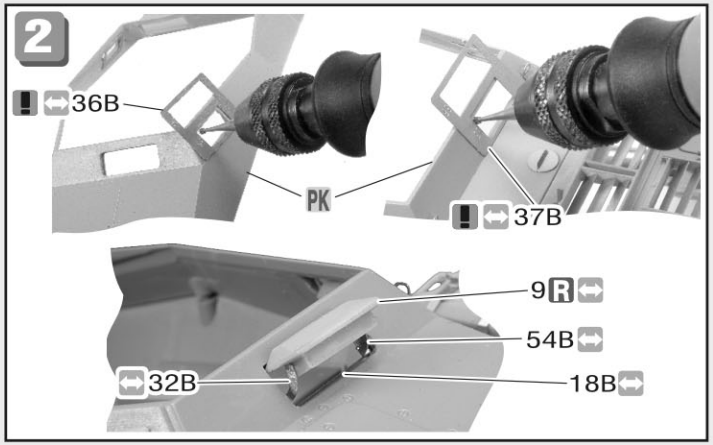

3

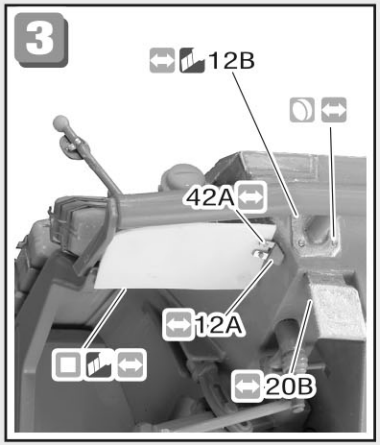

4

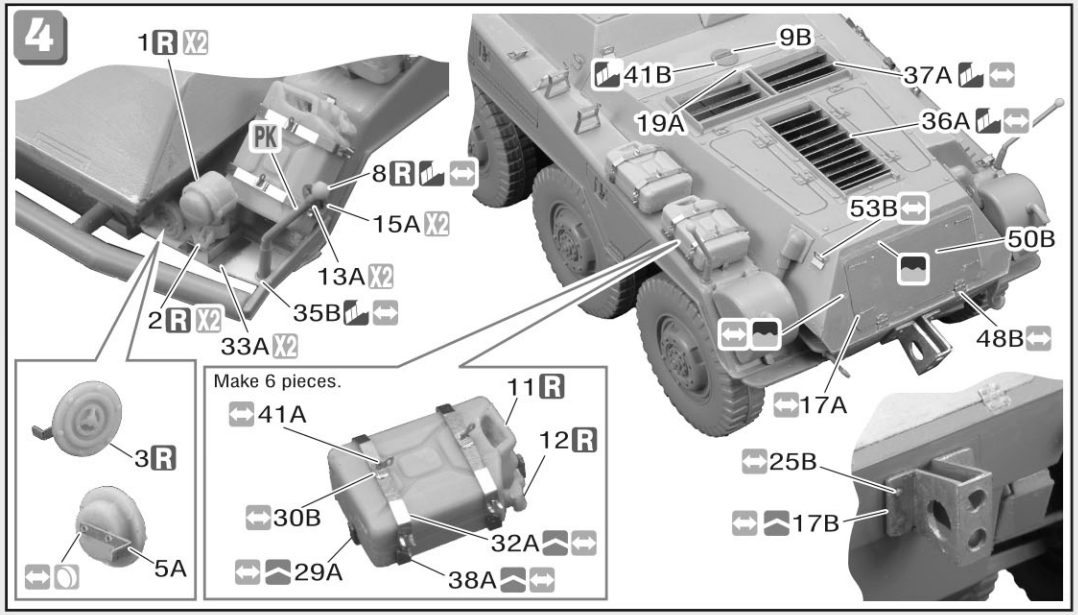

5

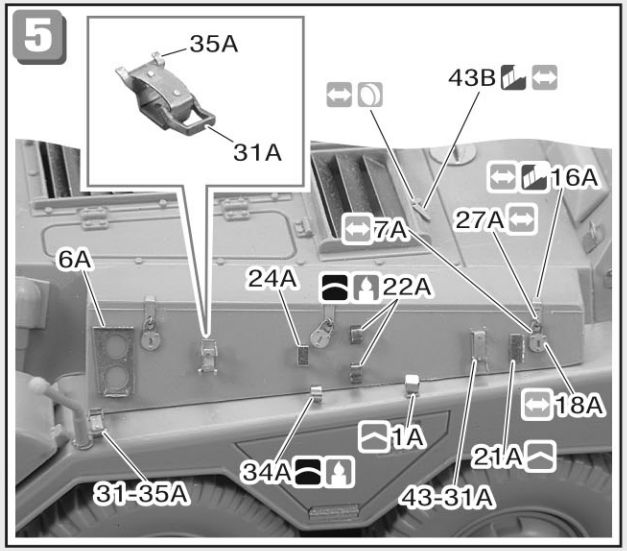

6

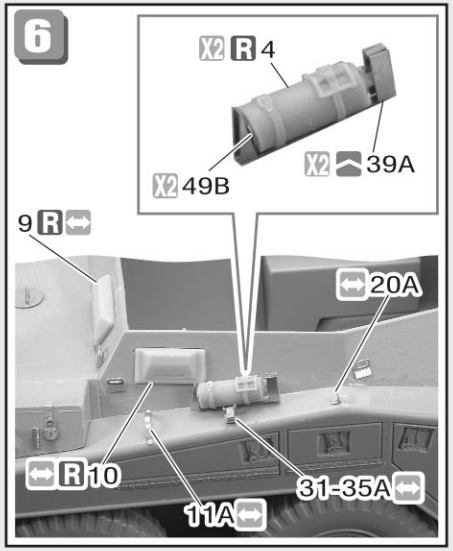

7

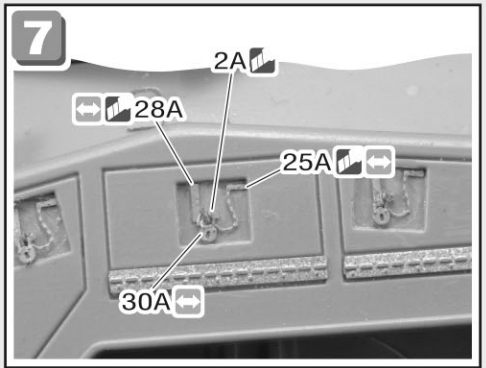

8

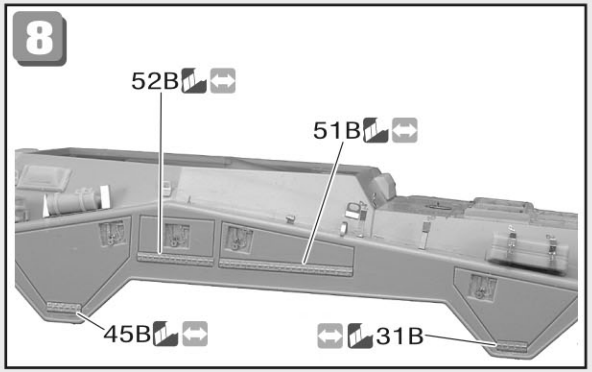

9

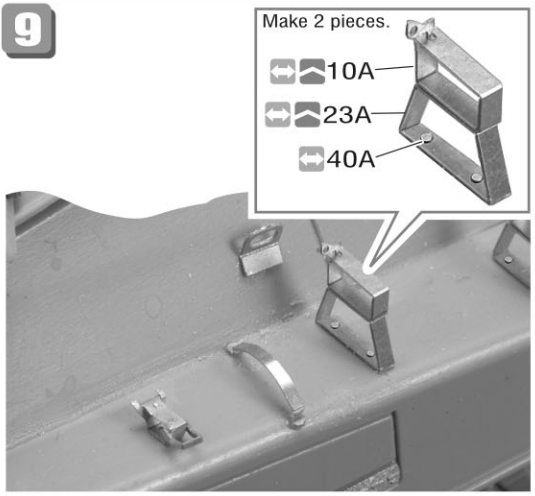

10

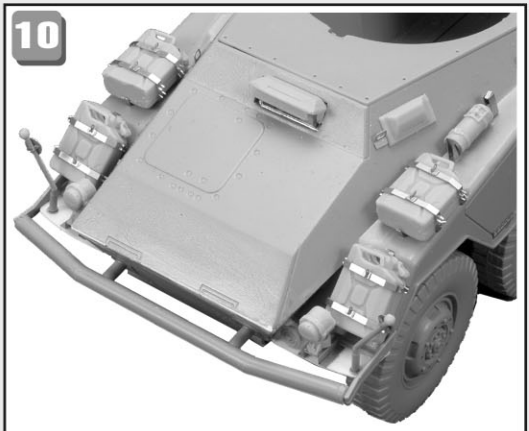

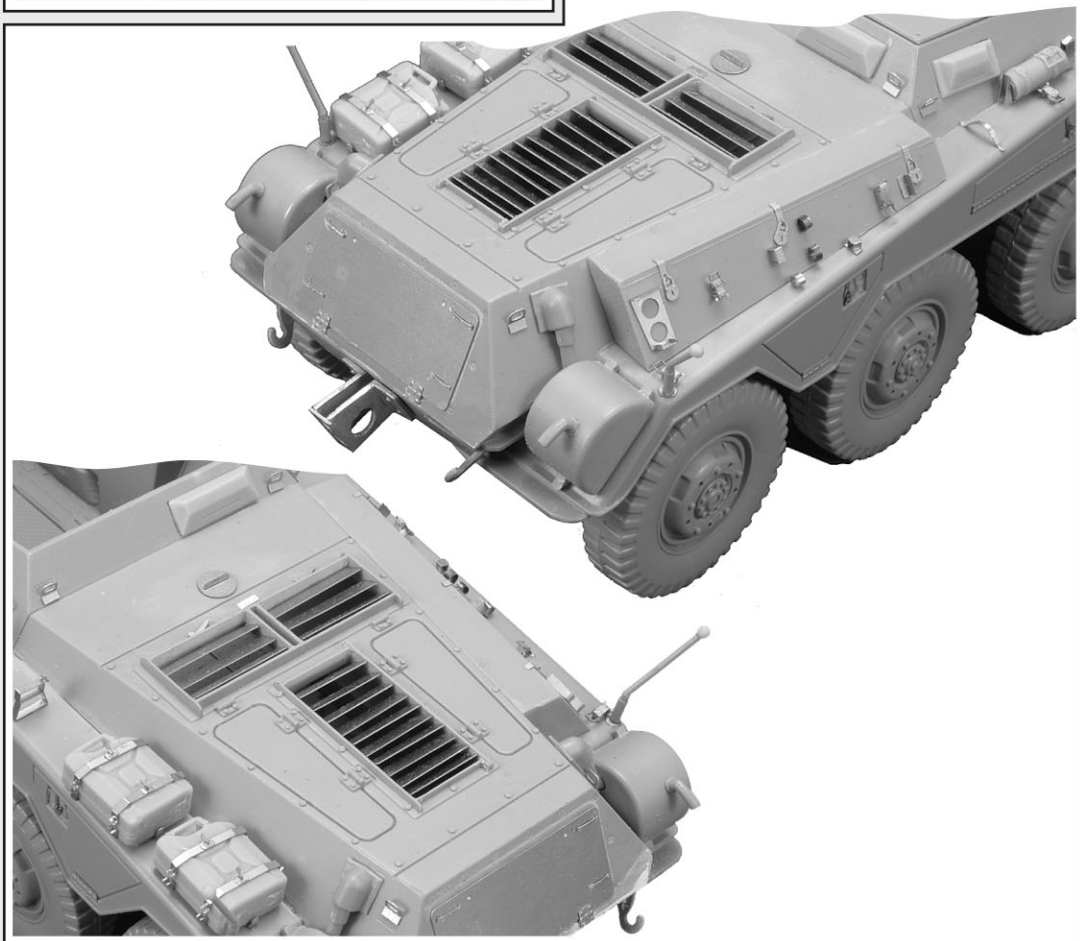

ROYAL MODEL BY REALE ROBERTO - PO BOX 25 - 95039 TRECASTAGNI (CT) ITALY
Tel. +39 95 780 0707-Fax +39 95 780 99 11
e-mail:info@royalmodel.com - Internet:www.royalmodel.com
© (2004) ROYAL MODEL