ROYAL MODEL DIORAMA ACCESSORIES

Royal Model by Reale Roberto,
Via Federico De Roberto, 65 - 95039 - Trecastagni (CT) ITALY

NO. 029

PANTHER G

1/35

microdetails set

(RESIN PARTS IDENTIFICATION)

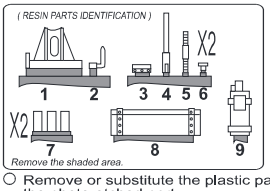

Remove the shaded area.

The parts included in this kit are to be assembled in conjunction with the Tamiya kit NO. 35174.
For best results in the assembling of photo-etched and resin parts use cyanoacrylate glue.
Always remember to use cyanoacrylate glue in a well ventilated area.
Before assembly be sure to remove all parts to be substituted with photo-etched and resin parts.
It is advised before assembly to study well the instructions which accompany this MICRODETAILS SET plus any other sufficient documentation.
Note that some particulars illustrated in the instructions have been enlarged for easy identification.
If distortion occurs in some resin parts due to humidity immerge in hot water and reform.

○ Remove or substitute the plastic part with the photo-etched part.

● Repeat same operation for the other side.

00 Photo-etched plate A part.

00 Photo-etched plate B part.

00 Resin part.

Tools rach details assembly.

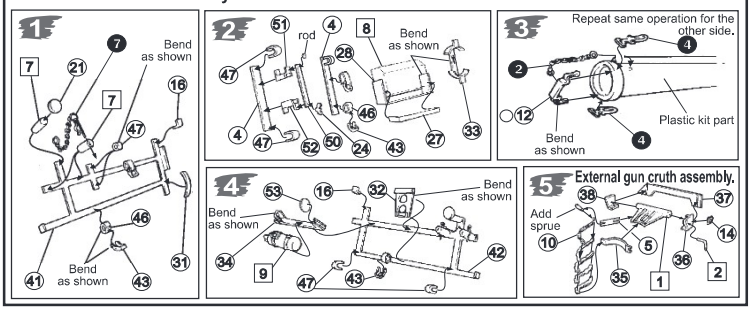

Upper hull details assembly.

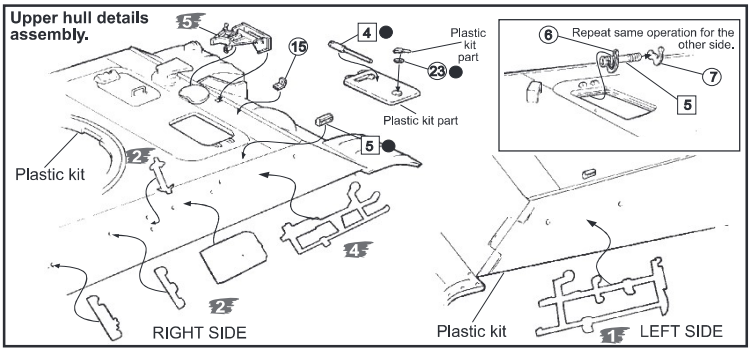

Turret details assembly.

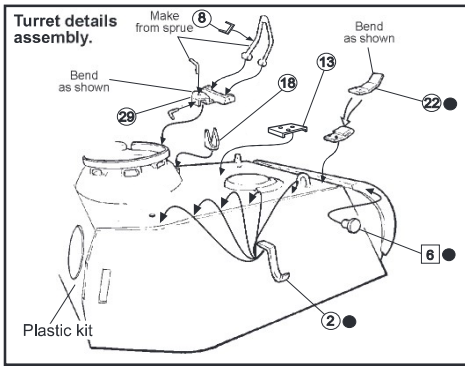

Main gun.

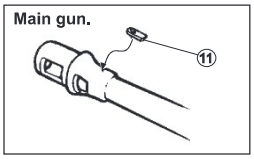

6 Bracket spare track links.

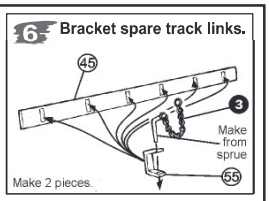

Upper hull details assembly.

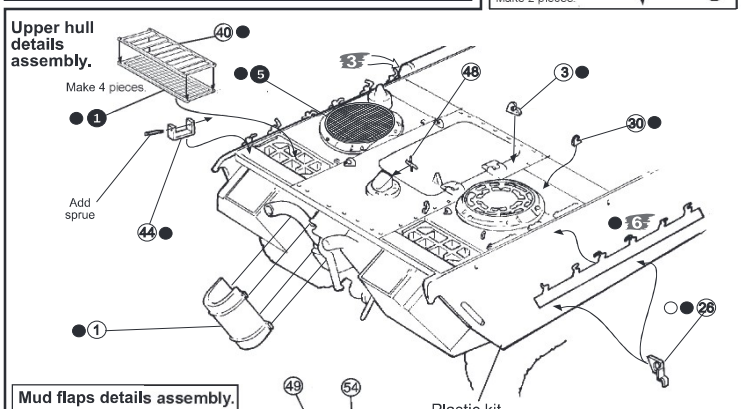

Mud flaps details assembly.

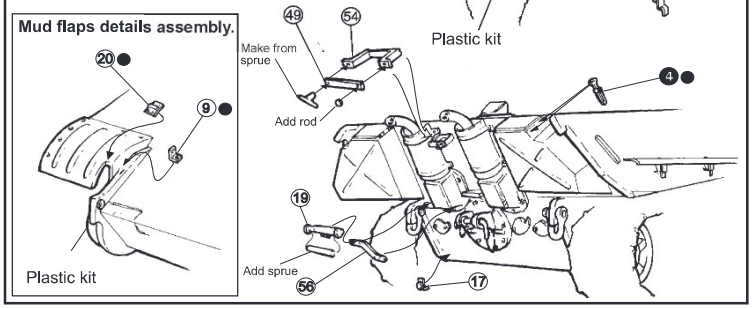

Drawings by **ROYAL MODEL** (1995)